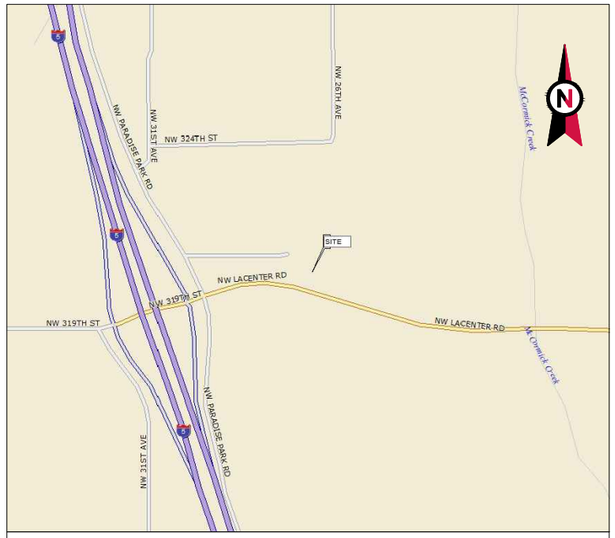

VICINITY MAP

AMERICAN TOWER®

ATC SITE NAME: WOODLAND-GRIFFITH
ATC SITE NUMBER: 310480
VERIZON WIRELESS SITE NAME: ILANI
VERIZON WIRELESS FUZE PID: 16270187
VERIZON WIRELESS MDG LOCATION CODE: 5000021209
SITE ADDRESS: 2706 NW LACENTER RD
RIDGEFIELD, WA 98642-9263

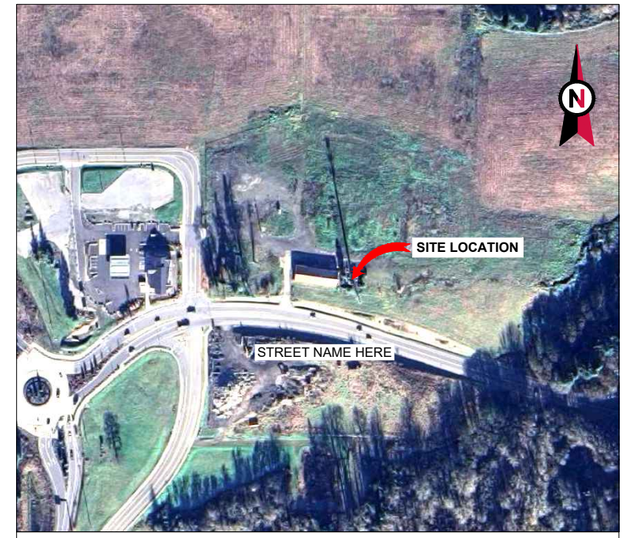

LOCATION MAP

VERIZON WIRELESS AMENDMENT DRAWINGS

COMPLIANCE CODE

ALL WORK SHALL BE PERFORMED AND MATERIALS INSTALLED IN ACCORDANCE WITH THE CURRENT EDITIONS OF THE FOLLOWING CODES AS ADOPTED BY THE LOCAL GOVERNMENT AUTHORITIES. NOTHING IN THESE PLANS IS TO BE CONSTRUED TO PERMIT WORK NOT CONFORMING TO THESE CODES.

1. 2021 INTERNATIONAL BUILDING CODE (IBC)
2. 2023 NATIONAL ELECTRIC CODE (NEC)
3. LOCAL BUILDING CODE
4. CITY/COUNTY ORDINANCES

UTILITY COMPANIES

POWER COMPANY: CLARK COUNTY PUD
PHONE: (360) 992-3000

TELEPHONE COMPANY: QWEST
PHONE: (800) 603-6000

811 Know what's below. Call before you dig.

PROJECT SUMMARY

SITE ADDRESS:

2706 NW LACENTER RD

RIDGEFIELD, WA 98642-9263

COUNTY: CLARK

REGISTERED COORDINATES:

LATITUDE: 45.85295

[45° 51" 10.62" N NAD 83]

LONGITUDE: -122.69830

[122° 41" 53.90" W NAD 83]

GROUND ELEVATION: 270' AMSL (SE)

ZONING INFORMATION:

JURISDICTION: CITY OF LA CENTER

PARCEL ID: 209705-000

PROJECT TEAM

TOWER OWNER:
AMERICAN TOWER
10 PRESIDENTIAL WAY
WOBURN, MA 01801

APPLICANT:
VERIZON WIRELESS

ENGINEER:
TEP OPCO, LLC
326 TRYON ROAD
RALEIGH, NC 27603-3530

PROPERTY OWNER:
COWLITZ TRIBAL GAMING AUTHORITY
1 COWLITZ WAY
RIDGEFIELD, WA 98642

PROJECT LOCATION DIRECTIONS

FROM I-95 TAKE EXIT 16 TO THE EAST. PROCEED ABOUT 200 YARDS. DRIVEWAY IS ON THE LEFT (NORTH) JUST BEFORE BUILDING WITH THE SIGN "MAKE MINE MILK". SITE IS AT SE CORNER OF THAT BUILDING. PARK IN FRONT OF SITE

PROJECT DESCRIPTION

VERIZON IS PROPOSING THE FOLLOWING WORK TO BE COMPLETED ON AN EXISTING 136' MONOPOLE TOWER:

TOWER WORK:
REMOVE (6) ANTENNA(S) AND (12) RRU(s).

INSTALL (12) ANTENNA(S), (3) RRU(s), AND (3) DUAL ANTENNA BRACKET(S).

EXISTING (3) OVP(s) AND (3) 1-1/4" HYBRIFLEX CABLE(S).

GROUND WORK:
INSTALL (4) BBU(s).

EXISTING (3) OVP(s).

PROJECT NOTES

1. THE FACILITY IS UNMANNED.
2. A TECHNICIAN WILL VISIT THE SITE APPROXIMATELY ONCE A MONTH FOR ROUTINE INSPECTION AND MAINTENANCE.
3. THE PROJECT WILL NOT RESULT IN ANY SIGNIFICANT LAND DISTURBANCE OR EFFECT OF STORM WATER DRAINAGE.
4. NO SANITARY SEWER, POTABLE WATER OR TRASH DISPOSAL IS REQUIRED.
5. HANDICAP ACCESS IS NOT REQUIRED.
6. THE PROJECT DEPICTED IN THESE PLANS QUALIFIES AS AN ELIGIBLE FACILITIES REQUEST ENTITLED TO EXPEDITED REVIEW UNDER 47 U.S.C. § 1455(A) AS A MODIFICATION OF AN EXISTING WIRELESS TOWER THAT INVOLVES THE COLLOCATION, REMOVAL, AND/OR REPLACEMENT OF TRANSMISSION EQUIPMENT THAT IS NOT A SUBSTANTIAL CHANGE UNDER CFR § 1.61000 (B)(7).

SHEET INDEX

SHEET NO:	DESCRIPTION:	REV:	DATE:	BY:
G-001	TITLE SHEET	0	05/15/25	RMJ
G-002	GENERAL NOTES	0	05/15/25	RMJ
C-001	OVERALL SITE PLAN	0	05/15/25	RMJ
C-101	DETAILED SITE PLAN	0	05/15/25	RMJ
C-201	TOWER ELEVATION	0	05/15/25	RMJ
C-401	ANTENNA INFORMATION & SCHEDULE	0	05/15/25	RMJ
C-501	CONSTRUCTION DETAILS	0	05/15/25	RMJ
E-101	GROUNDING PLAN	0	05/15/25	RMJ
E-501	GROUNDING DETAILS	0	05/15/25	RMJ
R-601	SUPPLEMENTAL			
R-602	SUPPLEMENTAL			
R-603	SUPPLEMENTAL			

CONTRACTOR PMI REQUIREMENTS

PMI ACCESSED AT: HTTPS://PMI.VZWSMART.COM

SMART TOOL VENDOR PROJECT NUMBER: 10286611

VZW LOCATION CODE (PSLC): 429912

***PMI AND REQUIREMENTS ALSO EMBEDDED IN MOUNT ANALYSIS REPORT

MOUNT MODIFICATION REQUIRED: NO

VZW APPROVED SMART KIT VENDORS: REFER TO MOUNT MODIFICATION DRAWINGS PAGES FOR VZW SMART KIT APPROVED VENDORS

AMERICAN TOWER

TEP

TEP OPCO LLC
326 TRYON ROAD
RALEIGH, NC 27603-3530
OFFICE: (919) 661-6351

TEP IS A FAMILY OF COMPANIES LICENSED TO PROVIDE DIFFERENT SERVICES IN DIFFERENT JURISDICTIONS. DEPENDING ON THE JURISDICTION, PROFESSIONAL ENGINEERING AND LAND SURVEYING SERVICES ARE PROVIDED BY TEP OPCO LLC, A DELAWARE LIMITED LIABILITY COMPANY, TEP ENGINEERING, LLC, A NORTH CAROLINA PROFESSIONAL LIMITED LIABILITY COMPANY, OR M&H ENGINEERING, LLC, A NEW YORK PROFESSIONAL LIMITED LIABILITY COMPANY. GENERAL CONTRACTOR SERVICES ARE PROVIDED BY TEP OPCO LLC, A DELAWARE LIMITED LIABILITY COMPANY. WE ACQUIRE THE REQUISITE LICENSES IN EACH STATE. ADDITIONAL INFORMATION CAN BE OBTAINED FROM THE COMPANY.

REV.	DESCRIPTION	BY	DATE
A	PRELIMINARY	RMJ	03/31/25
0	100% CONSTRUCTION	RMJ	05/15/25

ATC SITE NUMBER:
310480

ATC SITE NAME:
WOODLAND-GRIFFITH

VERIZON WIRELESS SITE NAME:
ILANI

SITE ADDRESS:
2706 NW LACENTER RD
RIDGEFIELD, WA 98642-9263

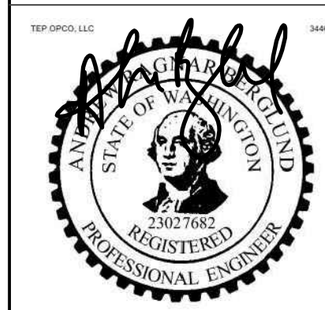

SEAL: 05/15/25

verizon

DATE DRAWN:	05/15/25
ATC JOB NO:	15195377
CUSTOMER NAME:	ILANI
CUSTOMER ID:	5000021209

TITLE SHEET

SHEET NUMBER:	REVISION:
G-001	0

Copyright © 2025 ATC IP LLC, All Rights Reserved

GENERAL CONSTRUCTION NOTES:

1. OWNER FURNISHED MATERIALS, VERIZON WIRELESS "THE COMPANY" WILL PROVIDE AND THE CONTRACTOR WILL INSTALL
   - A. BTS EQUIPMENT FRAME (PLATFORM) AND ICEBRIDGE SHELTER (GROUND BUILD/CO-LOCATE ONLY)
   - B. AC/TELCO INTERFACE BOX (PPC)
   - C. ICE BRIDGE (CABLE TRAY WITH COVER) (GROUND BUILD/CO-LOCATE ONLY, GC TO FURNISH AND INSTALL FOR ROOFTOP INSTALLATION)
   - D. TOWERS, MONOPOLES
   - E. TOWER LIGHTING
   - F. GENERATORS & LIQUID PROPANE TANK
   - G. ANTENNA STANDARD BRACKETS, FRAMES AND PIPES FOR MOUNTING
   - H. ANTENNAS (INSTALLED BY OTHERS)
   - I. TRANSMISSION LINE
   - J. TRANSMISSION LINE JUMPERS
   - K. TRANSMISSION LINE CONNECTORS WITH WEATHERPROOFING KITS
   - L. TRANSMISSION LINE GROUND KITS
   - M. HANGERS
   - N. HOISTING GRIPS
   - O. BTS EQUIPMENT

2. THE CONTRACTOR IS RESPONSIBLE TO PROVIDE ALL OTHER MATERIALS FOR THE COMPLETE INSTALLATION OF THE SITE INCLUDING, BUT NOT LIMITED TO, SUCH MATERIALS AS FENCING, STRUCTURAL STEEL SUPPORTING SUB-FRAME FOR PLATFORM, ROOFING LABOR AND MATERIALS, GROUNDING RINGS, GROUNDING WIRES, COPPER-CLAD OR XIT CHEMICAL GROUND ROD(S), BUSS BARS, TRANSFORMERS AND DISCONNECT SWITCHES WHERE APPLICABLE, TEMPORARY ELECTRICAL POWER, CONDUIT, LANDSCAPING COMPOUND STONE, CRANES, CORE DRILLING, SLEEPERS AND RUBBER MATTING, REBAR, CONCRETE CAISSONS, PADS AND/OR AUGER MOUNTS, MISCELLANEOUS FASTENERS, CABLE TRAYS, NON-STANDARD ANTENNA FRAMES AND ALL OTHER MATERIAL AND LABOR REQUIRED TO COMPLETE THE JOB ACCORDING TO THE DRAWINGS AND SPECIFICATIONS. IT IS THE POSITION OF VERIZON WIRELESS TO APPLY FOR PERMITTING AND CONTRACTOR RESPONSIBLE FOR PICKUP AND PAYMENT OF REQUIRED PERMITS.

3. ALL WORK SHALL CONFORM TO ALL CURRENT APPLICABLE FEDERAL, STATE, AND LOCAL CODES, INCLUDING ANSI/EIA/TIA-222, AND COMPLY WITH ATC CONSTRUCTION SPECIFICATIONS.

4. CONTRACTOR SHALL CONTACT LOCAL 811 FOR IDENTIFICATION OF UNDERGROUND UTILITIES PRIOR TO START OF CONSTRUCTION.

5. CONTRACTOR SHALL BE RESPONSIBLE FOR COORDINATING ALL REQUIRED INSPECTIONS.

6. ALL DIMENSIONS TO, OF, AND ON EXISTING BUILDINGS, DRAINAGE STRUCTURES, AND SITE IMPROVEMENTS SHALL BE VERIFIED IN FIELD BY CONTRACTOR WITH ALL DISCREPANCIES REPORTED TO THE ENGINEER.

7. DO NOT CHANGE SIZE OR SPACING OF STRUCTURAL ELEMENTS.

8. DETAILS SHOWN ARE TYPICAL; SIMILAR DETAILS APPLY TO SIMILAR CONDITIONS UNLESS OTHERWISE NOTED.

9. THESE DRAWINGS DO NOT INCLUDE NECESSARY COMPONENTS FOR CONSTRUCTION SAFETY WHICH SHALL BE THE SOLE RESPONSIBILITY OF THE CONTRACTOR.

10. CONTRACTOR SHALL BRACE STRUCTURES UNTIL ALL STRUCTURAL ELEMENTS NEEDED FOR STABILITY ARE INSTALLED. THESE ELEMENTS ARE AS FOLLOWS: LATERAL BRACING, ANCHOR BOLTS, ETC.

11. CONTRACTOR SHALL DETERMINE EXACT LOCATION OF EXISTING UTILITIES, GROUNDS DRAINS, DRAIN PIPES, VENTS, ETC. BEFORE COMMENCING WORK.

12. INCORRECTLY FABRICATED, DAMAGED, OR OTHERWISE MISFITTING OR NONCONFORMING MATERIALS OR CONDITIONS SHALL BE REPORTED TO THE VERIZON WIRELESS REP PRIOR TO REMEDIAL OR CORRECTIVE ACTION. ANY SUCH REMEDIAL ACTION SHALL REQUIRE WRITTEN APPROVAL BY THE VERIZON WIRELESS REP PRIOR TO PROCEEDING.

13. EACH CONTRACTOR SHALL COOPERATE WITH THE VERIZON WIRELESS REP, AND COORDINATE HIS WORK WITH THE WORK OF OTHERS.

14. CONTRACTOR SHALL REPAIR ANY DAMAGE CAUSED BY CONSTRUCTION OF THIS PROJECT TO MATCH EXISTING PRE-CONSTRUCTION CONDITIONS TO THE SATISFACTION OF THE VERIZON WIRELESS CONSTRUCTION MANAGER.

15. ALL CABLE/CONDUIT ENTRY/EXIT PORTS SHALL BE WEATHERPROOFED DURING INSTALLATION USING A SILICONE SEALANT.

16. WHERE EXISTING CONDITIONS DO NOT MATCH THOSE SHOWN IN THIS PLAN SET, CONTRACTOR SHALL NOTIFY THE VERIZON WIRELESS REP AND ENGINEER OF RECORD IMMEDIATELY.

17. CONTRACTOR SHALL ENSURE ALL SUBCONTRACTORS ARE PROVIDED WITH A COMPLETE AND CURRENT SET OF DRAWINGS AND SPECIFICATIONS FOR THIS PROJECT.

18. CONTRACTOR SHALL REMOVE ALL RUBBISH AND DEBRIS FROM THE SITE AT THE END OF EACH DAY.

19. CONTRACTOR SHALL COORDINATE WORK SCHEDULE WITH AMERICAN TOWER CORPORATION (ATC) AND TAKE PRECAUTIONS TO MINIMIZE IMPACT AND DISRUPTION OF OTHER OCCUPANTS OF THE FACILITY.

20. CONTRACTOR SHALL FURNISH VERIZON WIRELESS AND AMERICAN TOWER CORPORATION (ATC) WITH A PDF MARKED UP AS-BUILT SET OF DRAWINGS UPON COMPLETION OF WORK.

21. PRIOR TO SUBMISSION OF BID, CONTRACTOR SHALL COORDINATE WITH VERIZON WIRELESS REP TO DETERMINE WHAT, IF ANY, ITEMS WILL BE PROVIDED. ALL ITEMS NOT PROVIDED SHALL BE PROVIDED AND INSTALLED BY THE CONTRACTOR. CONTRACTOR WILL INSTALL ALL ITEMS PROVIDED.

22. PRIOR TO SUBMISSION OF BID, CONTRACTOR SHALL COORDINATE WITH VERIZON WIRELESS REP TO DETERMINE IF ANY PERMITS WILL BE OBTAINED BY CONTRACTOR. ALL REQUIRED PERMITS NOT OBTAINED BY VERIZON WIRELESS MUST BE OBTAINED, AND PAID FOR, BY THE CONTRACTOR.

23. CONTRACTOR SHALL INSTALL ALL SITE SIGNAGE IN ACCORDANCE WITH VERIZON WIRELESS SPECIFICATIONS AND REQUIREMENTS.

24. CONTRACTOR SHALL SUBMIT ALL SHOP DRAWINGS TO VERIZON WIRELESS FOR REVIEW AND APPROVAL PRIOR TO FABRICATION.

25. ALL EQUIPMENT SHALL BE INSTALLED ACCORDING TO MANUFACTURER'S SPECIFICATIONS AND LOCATED ACCORDING TO VERIZON WIRELESS SPECIFICATIONS, AND AS SHOWN IN THESE PLANS.

26. THE CONTRACTOR SHALL SUPERVISE AND DIRECT THE PROJECT DESCRIBED HEREIN. THE CONTRACTOR SHALL BE SOLELY RESPONSIBLE FOR ALL THE CONSTRUCTION MEANS, METHODS, TECHNIQUES, SEQUENCES AND PROCEDURES AND FOR COORDINATING ALL PORTIONS OF THE WORK UNDER THE CONTRACT.

27. CONTRACTOR SHALL NOTIFY VERIZON WIRELESS REP A MINIMUM OF 48 HOURS IN ADVANCE OF POURING CONCRETE OR BACKFILLING ANY UNDERGROUND UTILITIES, FOUNDATIONS OR SEALING ANY WALL, FLOOR OR ROOF PENETRATIONS FOR ENGINEERING REVIEW AND APPROVAL.

28. WHEN THE PROJECT SCOPE REQUIRES THE USE OF THE SAFETY CLIMB, THE GENERAL CONTRACTOR SHALL ENSURE THE SAFETY CLIMB IS FREE OF OBSTRUCTIONS, NOT RUBBING ON OR TRAPPED BY ANY INSTALLED CUSTOMER EQUIPMENT, IS VISUALLY TAUT, MEETS MANUFACTURER INSTALLATION SPECIFICATIONS, AND IS FIRMLY SECURED AT ALL CABLE GUIDE LOCATIONS UPON PROJECT COMPLETION.

29. COMPLETION OF PROJECT SHALL NOT OBSTRUCT, TRAP, LOOSEN, OR OTHERWISE CAUSE FAILURE TO MEET MANUFACTURER INSTALLATION REQUIREMENTS FOR THE SAFETY CLIMB.

30. CONTRACTOR SHALL BE RESPONSIBLE FOR SITE SAFETY INCLUDING COMPLIANCE WITH ALL APPLICABLE OSHA STANDARDS AND RECOMMENDATIONS AND SHALL PROVIDE ALL NECESSARY SAFETY DEVICES INCLUDING PPE AND PPM AND CONSTRUCTION DEVICES SUCH AS WELDING AND FIRE PREVENTION, TEMPORARY SHORING, SCAFFOLDING, TRENCH BOXES/SLOPING, BARRIERS, ETC.

31. THE CONTRACTOR SHALL PROTECT AT HIS OWN EXPENSE, ALL EXISTING FACILITIES AND SUCH OF HIS NEW WORK LIABLE TO INJURY DURING THE CONSTRUCTION PERIOD. ANY DAMAGE CAUSED BY NEGLECT ON THE PART OF THIS CONTRACTOR OR HIS REPRESENTATIVES, OR BY THE ELEMENTS DUE TO NEGLECT ON THE PART OF THIS CONTRACTOR OR HIS REPRESENTATIVES, EITHER TO THE EXISTING WORK, OR TO HIS WORK OR THE WORK OF ANY OTHER CONTRACTOR, SHALL BE REPAIRED AT HIS EXPENSE TO THE OWNER'S SATISFACTION.

32. ALL WORK SHALL BE INSTALLED IN A FIRST CLASS, NEAT AND WORKMANLIKE MANNER BY MECHANICS SKILLED IN THE TRADE INVOLVED. THE QUALITY OF WORKMANSHIP SHALL BE SUBJECT TO THE APPROVAL OF THE VERIZON WIRELESS REP. ANY WORK FOUND BY THE VERIZON WIRELESS REP TO BE OF INFERIOR QUALITY AND/OR WORKMANSHIP SHALL BE REPLACED AND/OR REWORKED AT CONTRACTOR EXPENSE UNTIL APPROVAL IS OBTAINED.

33. IN ORDER TO ESTABLISH STANDARDS OF QUALITY AND PERFORMANCE, ALL TYPES OF MATERIALS LISTED HEREINAFTER BY MANUFACTURER'S NAMES AND/OR MANUFACTURER'S CATALOG NUMBER SHALL BE PROVIDED BY THESE MANUFACTURERS AS SPECIFIED.

34. VERIZON WIRELESS FURNISHED EQUIPMENT SHALL BE PICKED-UP AT THE VERIZON WIRELESS WAREHOUSE, NO LATER THAN 48HR AFTER BEING NOTIFIED INSURED, STORED, UNCRATE, PROTECTED AND INSTALLED BY THE CONTRACTOR WITH ALL APPURTENANCES REQUIRED TO PLACE THE EQUIPMENT IN OPERATION, READY FOR USE. THE CONTRACTOR SHALL BE RESPONSIBLE FOR THE EQUIPMENT AFTER PICKING IT UP.

35. VERIZON WIRELESS OR HIS ARCHITECT/ENGINEER RESERVES THE RIGHT TO REJECT ANY EQUIPMENT OR MATERIALS WHICH, IN HIS OWN OPINION ARE NOT IN COMPLIANCE WITH THE CONTRACT DOCUMENTS, EITHER BEFORE OR AFTER INSTALLATION AND THE EQUIPMENT SHALL BE REPLACED WITH EQUIPMENT CONFORMING TO THE REQUIREMENTS OF THE CONTRACT DOCUMENTS BY THE CONTRACTOR AT NO COST TO VERIZON WIRELESS OR THEIR ARCHITECT/ENGINEER.

SPECIAL CONSTRUCTION ANTENNA INSTALLATION NOTES:

1. WORK INCLUDED:

A. ANTENNA AND COAXIAL/HYBRID CABLES ARE FURNISHED BY VERIZON WIRELESS UNDER A SEPARATE CONTRACT. THE CONTRACTOR SHALL ASSIST ANTENNA INSTALLATION CONTRACTOR IN TERMS OF COORDINATION AND SITE ACCESS. ERECTION SUBCONTRACTOR SHALL BE RESPONSIBLE FOR THE PROTECTION OF PERSONNEL.

B. INSTALL ANTENNAS AS INDICATED ON DRAWINGS AND VERIZON WIRELESS SPECIFICATIONS.

C. INSTALL GALVANIZED STEEL ANTENNA MOUNTS AS INDICATED ON DRAWINGS.

D. INSTALL FURNISHED GALVANIZED STEEL OR ALUMINUM WAVEGUIDE.

E. INSTALL COAXIAL/HYBRID CABLES AND TERMINATING BETWEEN ANTENNAS AND EQUIPMENT PER MANUFACTURER'S RECOMMENDATIONS. WEATHERPROOF ALL CONNECTIONS BETWEEN THE ANTENNA AND EQUIPMENT PER MANUFACTURER'S REQUIREMENTS. TERMINATE ALL COAXIAL/HYBRID CABLE THREE (3) FEET IN EXCESS OF ENTRY PORT LOCATION UNLESS OTHERWISE STATED.

2. ANTENNA AND COAXIAL/HYBRID CABLE GROUNDING:

A. ALL EXTERIOR #6 GREEN GROUND WIRE "DAISY CHAIN" CONNECTIONS ARE TO BE WEATHER SEALED WITH RFS CONNECTORS/SPLICE WEATHERPROOFING KIT #221213 OR EQUAL.

B. ALL COAXIAL/HYBRID CABLE GROUNDING KITS ARE TO BE INSTALLED ON STRAIGHT RUNS OF COAXIAL/HYBRID CABLE (NOT WITHIN BENDS)

ALL DISCREPANCIES FROM WHAT IS SHOWN ON THESE CONSTRUCTION DRAWINGS SHALL BE COMMUNICATED TO ATC ENGINEERING IMMEDIATELY FOR CORRECTION OR RE-DESIGN. FAILURE TO COMMUNICATE DIRECTLY WITH ATC ENGINEERING OR ANY CHANGES FROM THE DESIGN CONDUCTED WITHOUT PRIOR APPROVAL FROM ATC ENGINEERING SHALL BE THE SOLE RESPONSIBILITY OF THE GENERAL CONTRACTOR.

AMERICAN TOWER

TEP

TEP OPCO LLC
326 TRYON ROAD
RALEIGH, NC 27603-3530
OFFICE: (919) 661-6351

TEP IS A FAMILY OF COMPANIES LICENSED TO PROVIDE DIFFERENT SERVICES IN DIFFERENT JURISDICTIONS. DEPENDING ON THE JURISDICTION, PROFESSIONAL ENGINEERING AND LAND SURVEYING SERVICES ARE PROVIDED BY TEP OPCO LLC, A DELAWARE LIMITED LIABILITY COMPANY, TEP ENGINEERING, LLC, A NORTH CAROLINA PROFESSIONAL LIMITED LIABILITY COMPANY, OR M&H ENGINEERING, LLC, A NEW YORK PROFESSIONAL LIMITED LIABILITY COMPANY. GENERAL CONTRACTOR SERVICES ARE PROVIDED BY TEP OPCO LLC, A DELAWARE LIMITED LIABILITY COMPANY. WE ACQUIRE THE REQUISITE LICENSES IN EACH STATE. ADDITIONAL INFORMATION CAN BE OBTAINED FROM THE COMPANY.

REV.	DESCRIPTION	BY	DATE
A	PRELIMINARY	RMJ	03/31/25
0	100% CONSTRUCTION	RMJ	05/15/25

ATC SITE NUMBER:
310480

ATC SITE NAME:
WOODLAND-GRIFFITH

VERIZON WIRELESS SITE NAME:
ILANI

SITE ADDRESS:
2706 NW LACENTER RD
RIDGEFIELD, WA 98642-9263

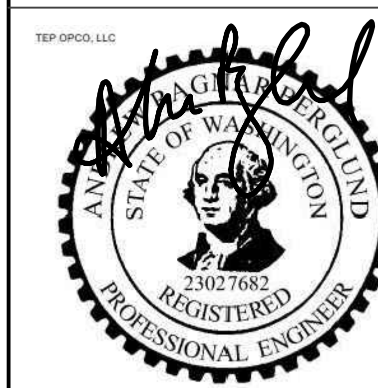

SEAL: 05/15/25

verizon

DATE DRAWN:	05/15/25
ATC JOB NO:	15195377
CUSTOMER NAME:	ILANI
CUSTOMER ID:	5000021209

GENERAL NOTES

SHEET NUMBER:	REVISION:
G-002	0

Copyright © 2025 ATC IP LLC, All Rights Reserved

NOTES:

1. BOUNDARY LINES OBTAINED FROM CITY OF LA CENTER ONLINE GIS.
2. ZONING INFORMATION OBTAINED FROM CITY OF LA CENTER.
3. THE TOWER IS LOCATED IN ZONE 'X' AREAS DETERMINED TO BE OUTSIDE THE 0.2% ANNUAL CHANCE FLOODPLAIN ACCORDING TO FEMA COMMUNITY PANEL #53011C0202D, DATED SEPTEMBER 5, 2012.

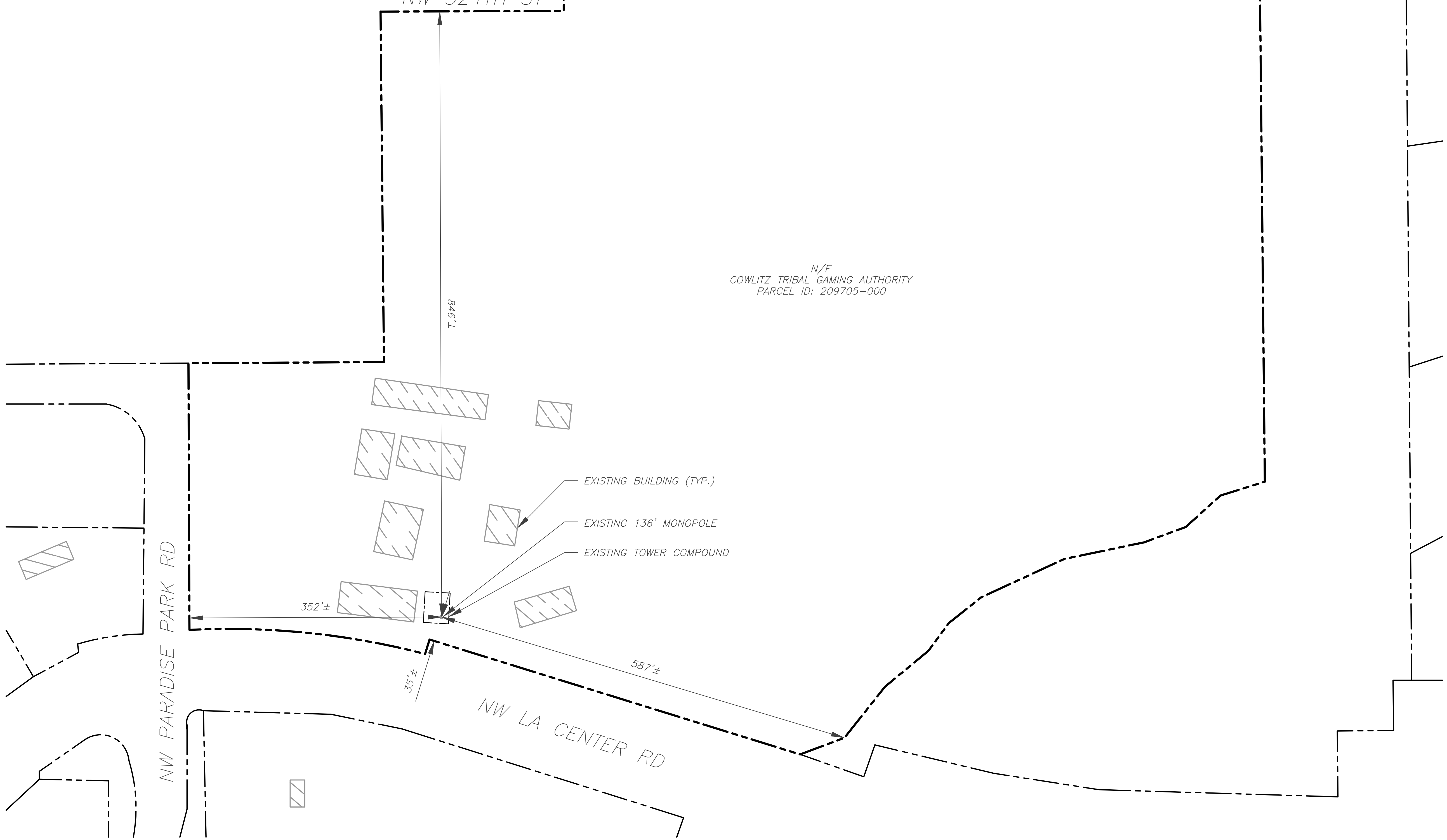

LEGEND

EXISTING PROPERTY LINE
EXISTING ADJACENT PROPERTY LINE
EXISTING LEASE AREA

1 OVERALL SITE PLAN

SCALE 1" = 150'

0 150' 300'

SCALE: 1"=150' (11X17)
1"=75' (22X34)

N

AMERICAN TOWER

TEP

TEP OPCO LLC
326 TRYON ROAD
RALEIGH, NC 27603-3530
OFFICE: (919) 661-6351

TEP IS A FAMILY OF COMPANIES LICENSED TO PROVIDE DIFFERENT SERVICES IN DIFFERENT JURISDICTIONS. DEPENDING ON THE JURISDICTION, PROFESSIONAL ENGINEERING AND LAND SURVEYING SERVICES ARE PROVIDED BY TEP OPCO LLC, A DELAWARE LIMITED LIABILITY COMPANY, TEP ENGINEERING, LLC, A NORTH CAROLINA PROFESSIONAL LIMITED LIABILITY COMPANY, OR M&H ENGINEERING, LLC, A NEW YORK PROFESSIONAL LIMITED LIABILITY COMPANY. GENERAL CONTRACTOR SERVICES ARE PROVIDED BY TEP OPCO LLC, A DELAWARE LIMITED LIABILITY COMPANY. WE ACQUIRE THE REQUISITE LICENSES IN EACH STATE. ADDITIONAL INFORMATION CAN BE OBTAINED FROM THE COMPANY.

REV.	DESCRIPTION	BY	DATE
A	PRELIMINARY	RMJ	03/31/25
0	100% CONSTRUCTION	RMJ	05/15/25

ATC SITE NUMBER:
310480

ATC SITE NAME:
WOODLAND-GRIFFITH

VERIZON WIRELESS SITE NAME:
ILANI

SITE ADDRESS:
2706 NW LACENTER RD
RIDGEFIELD, WA 98642-9263

TEP OPCO, LLC 3446

ANDREW GAGE BERGLUND
STATE OF WASHINGTON
23027682
REGISTERED
PROFESSIONAL ENGINEER

SEAL: 05/15/25

verizon

DATE DRAWN:	05/15/25
ATC JOB NO:	15195377
CUSTOMER NAME:	ILANI
CUSTOMER ID:	5000021209

OVERALL SITE PLAN

SHEET NUMBER:	REVISION:
C-001	0

Copyright © 2025 ATC IP LLC, All Rights Reserved

SITE PLAN NOTES:

1. THIS SITE PLAN REPRESENTS THE BEST PRESENT KNOWLEDGE AVAILABLE TO THE ENGINEER AT THE TIME OF THIS DESIGN. THE CONTRACTOR SHALL VISIT THE SITE PRIOR TO CONSTRUCTION AND VERIFY ALL EXISTING CONDITIONS RELATED TO THE SCOPE OF WORK FOR THIS PROJECT.

2. ICE BRIDGE, CABLE LADDER, COAX PORT, AND COAX CABLE ARE SHOWN FOR REFERENCE ONLY. CONTRACTOR SHALL CONFIRM THE EXACT LOCATION OF ALL PROPOSED AND EXISTING EQUIPMENT AND STRUCTURES DEPICTED ON THIS PLAN. BEFORE UTILIZING EXISTING CABLE SUPPORTS, COAX PORTS, INSTALLING NEW PORTS OR ANY OTHER EQUIPMENT, CONTRACTOR SHALL VERIFY ALL ASPECTS OF THE COMPONENTS MEET THE ATC SPECIFICATIONS.

3. THIS CONSTRUCTION DRAWING SET IS NOT INTENDED TO ADDRESS ANY ELECTRICAL UPGRADES NEEDED. ANY ELECTRICAL UPGRADES WILL BE SHOWN IN A SEPARATE CONSTRUCTION DRAWING SET.

LEGEND

⊗	GROUNDING TEST WELL
ATS	AUTOMATIC TRANSFER SWITCH
B	BOLLARD
CSC	CELL SITE CABINET
D	DISCONNECT
E	ELECTRICAL
F	FIBER
GEN	GENERATOR
G	GENERATOR RECEPTACLE
HH, V	HAND HOLE, VAULT
IB	ICE BRIDGE
K	KENTROX BOX
LC	LIGHTING CONTROL
M	METER
PB	PULL BOX
PP	POWER POLE
T	TELCO
TRN	TRANSFORMER
— x —	CHAINLINK FENCE

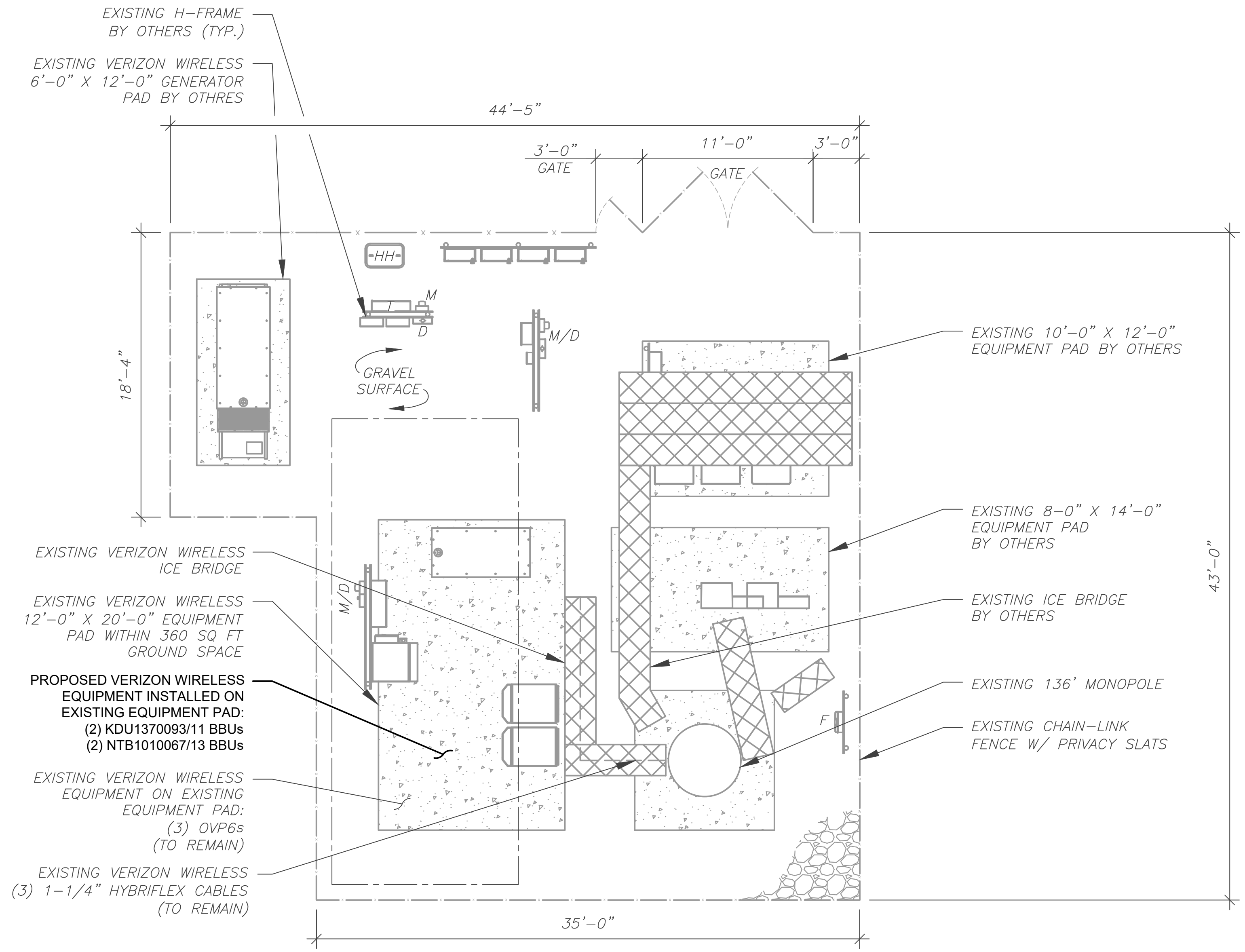

1 DETAILED SITE PLAN

SCALE: 1" = 10'

0 10' 20'

SCALE: 1"=10' (11X17)
1"=5' (22X34)

AMERICAN TOWER

TEP

TEP OPCO LLC
326 TRYON ROAD
RALEIGH, NC 27603-3530
OFFICE: (919) 661-6351

TEP IS A FAMILY OF COMPANIES LICENSED TO PROVIDE DIFFERENT SERVICES IN DIFFERENT JURISDICTIONS. DEPENDING ON THE JURISDICTION, PROFESSIONAL ENGINEERING AND LAND SURVEYING SERVICES ARE PROVIDED BY TEP OPCO LLC, A DELAWARE LIMITED LIABILITY COMPANY, TEP ENGINEERING, LLC, A NORTH CAROLINA PROFESSIONAL LIMITED LIABILITY COMPANY, OR M&H ENGINEERING, LLC, A NEW YORK PROFESSIONAL LIMITED LIABILITY COMPANY. GENERAL CONTRACTOR SERVICES ARE PROVIDED BY TEP OPCO LLC, A DELAWARE LIMITED LIABILITY COMPANY. WE ACQUIRE THE REQUISITE LICENSES IN EACH STATE. ADDITIONAL INFORMATION CAN BE OBTAINED FROM THE COMPANY.

REV.	DESCRIPTION	BY	DATE
A	PRELIMINARY	RMJ	03/31/25
0	100% CONSTRUCTION	RMJ	05/15/25

ATC SITE NUMBER:
310480

ATC SITE NAME:
WOODLAND-GRIFFITH

VERIZON WIRELESS SITE NAME:
ILANI

SITE ADDRESS:
2706 NW LACENTER RD
RIDGEFIELD, WA 98642-9263

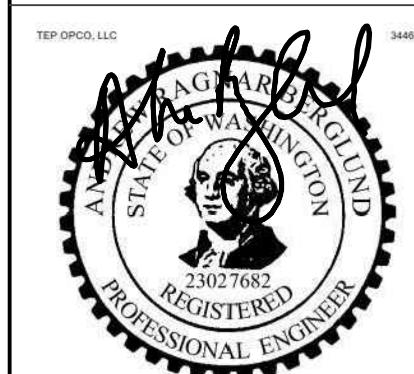

SEAL: 05/15/25

verizon

DATE DRAWN:	05/15/25
ATC JOB NO:	15195377
CUSTOMER NAME:	ILANI
CUSTOMER ID:	5000021209

DETAILED SITE PLAN

SHEET NUMBER:	REVISION:
C-101	0

Copyright © 2025 ATC IP LLC, All Rights Reserved

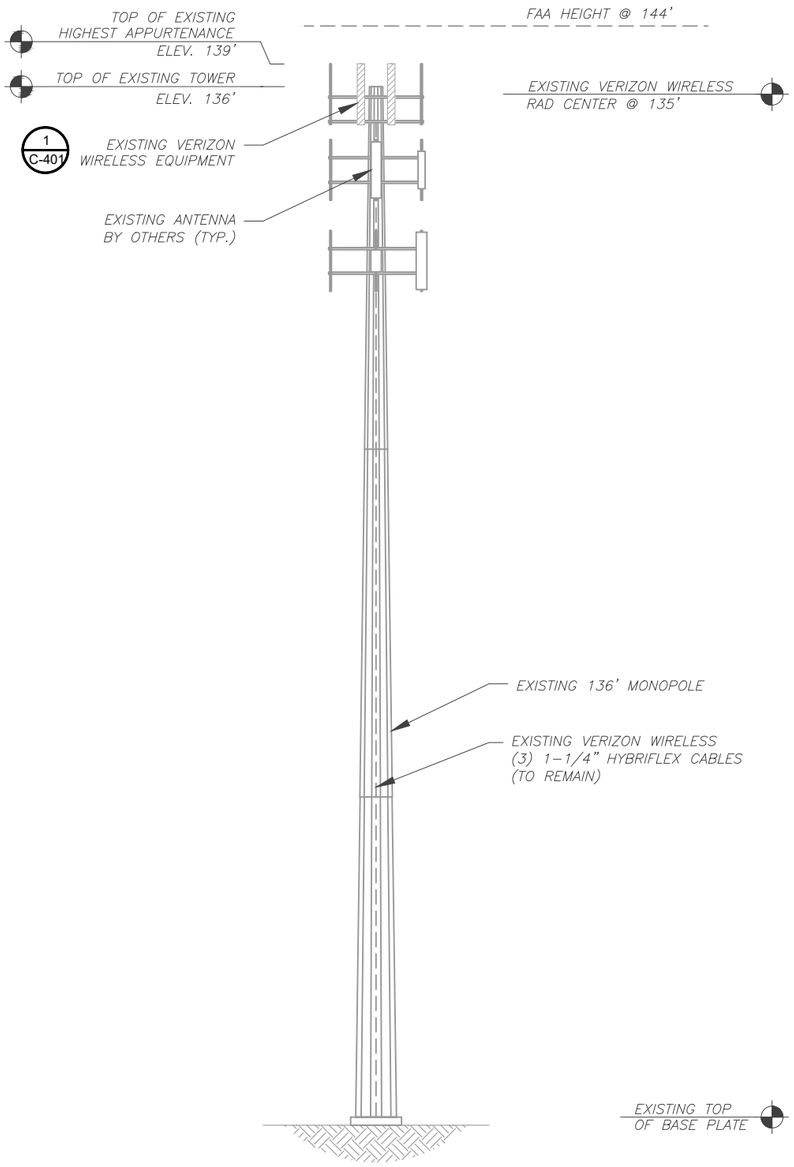

1 EXISTING TOWER ELEVATION

SCALE: N.T.S.

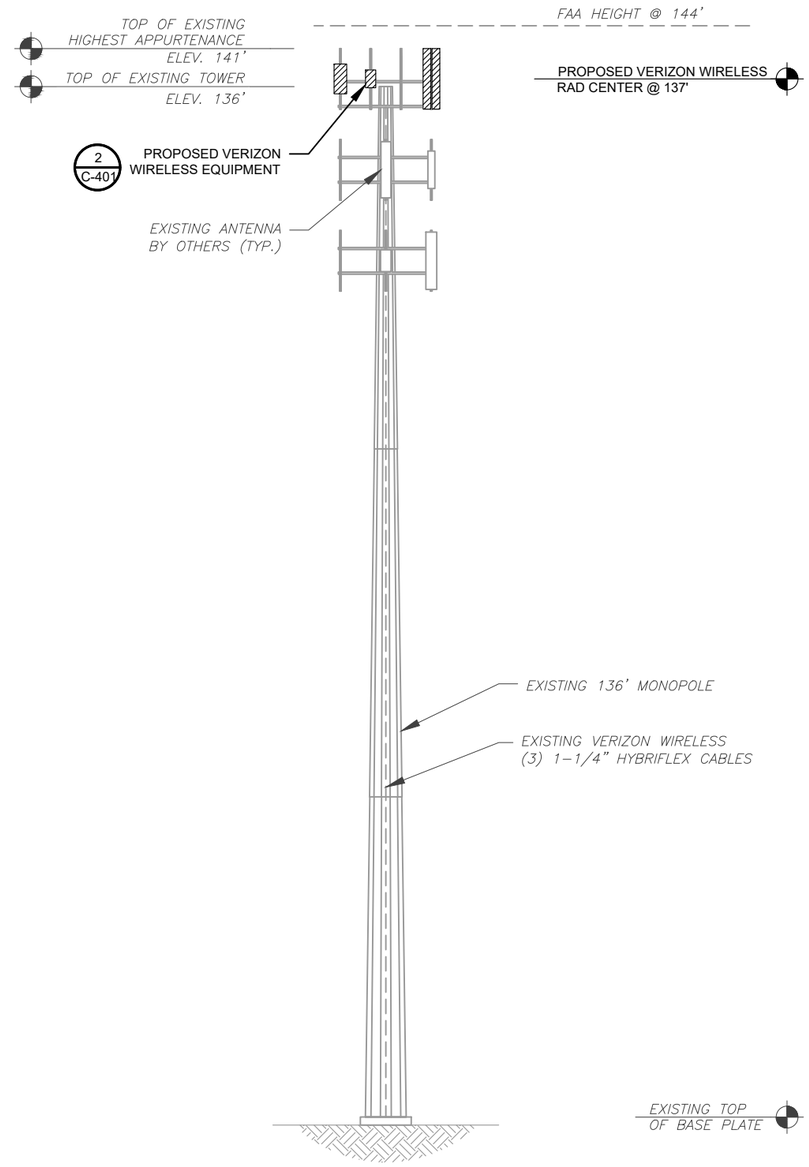

2 PROPOSED TOWER ELEVATION

SCALE: N.T.S.

PER MOUNT ANALYSIS COMPLETED BY TOWER ENGINEERING SOLUTIONS, LLC, DATED MARCH 20, 2025, THE EXISTING MOUNT CAN ADEQUATELY SUPPORT THE PROPOSED LOADING.

POST-MODIFICATION INSPECTION (PMI) REQUIRED ON ALL SITES. REFER TO SHEET G-001 OF THESE CONSTRUCTION DRAWINGS, AS WELL AS THE MOUNT ANALYSIS PREPARED BY TOWER ENGINEERING SOLUTIONS, LLC, DATED MARCH 20, 2025 FOR ADDITIONAL DETAILS.

ATC IS FILED FOR A FAA HEIGHT HIGHER THAN TOP OF TOWER.

TOWER NOTES:

1. IT IS THE CONTRACTOR'S RESPONSIBILITY TO CONFIRM WITH THE PROJECT MANAGER THAT THEY HAVE THE MOST RECENT VERSION OF THE STRUCTURAL ANALYSIS BEFORE COMMENCING WORK. EXISTING AND PROPOSED TOWER APPURTENANCES, MOUNTS, AND ANTENNAS ARE SHOWN BASED ON THE STRUCTURAL ANALYSIS.
2. WHERE APPLICABLE, ALL NEW ANTENNAS, EQUIPMENT, MOUNTS, CABLING, ETC. SHALL BE PAINTED/SOCKED TO MATCH EXISTING EQUIPMENT IN ACCORDANCE WITH FAA, JURISDICTION, AND/OR OTHER LOCAL REQUIREMENTS.
3. ROUTE PROPOSED CABLES ALONG SAME PATH AS EXISTING CABLES AND IN ACCORDANCE WITH STRUCTURAL ANALYSIS. IF ADEQUATE SPACE EXISTS, ROUTE CABLES THROUGH ENTRY PORT HOLE, UP INSIDE OF MONOPOLE, AND THROUGH EXIT PORT HOLE. IF ROUTING OUTSIDE THE MONOPOLE, ATTACH CABLES USING STAND-OFF ADAPTERS MOUNTED TO TOWER USING STAINLESS STEEL BANDING. ADEQUATELY SECURE CABLES USING EITHER APPROPRIATELY SIZED STAINLESS STEEL SNAP-INS OR MOUNTING HARDWARE AND BRACKETS AS SPECIFIED BY CABLE MANUFACTURER.
4. TOWER ELEVATION DEPICTION MAY NOT REFLECT ALL EQUIPMENT INCLUDED IN STRUCTURAL ANALYSIS. REFER TO STRUCTURAL ANALYSIS FOR FULL TOWER LOADING.

AMERICAN TOWER

TEP

TEP OPCO LLC
326 TRYON ROAD
RALEIGH, NC 27603-3530
OFFICE: (919) 661-6351

TEP IS A FAMILY OF COMPANIES LICENSED TO PROVIDE DIFFERENT SERVICES IN DIFFERENT JURISDICTIONS. DEPENDING ON THE JURISDICTION, PROFESSIONAL ENGINEERING AND LAND SURVEYING SERVICES ARE PROVIDED BY TEP OPCO LLC, A DELAWARE LIMITED LIABILITY COMPANY, TEP ENGINEERING, LLC, A NORTH CAROLINA PROFESSIONAL LIMITED LIABILITY COMPANY, OR M&H ENGINEERING, LLC, A NEW YORK PROFESSIONAL LIMITED LIABILITY COMPANY. GENERAL CONTRACTOR SERVICES ARE PROVIDED BY TEP OPCO LLC, A DELAWARE LIMITED LIABILITY COMPANY. WE ACQUIRE THE REQUISITE LICENSES IN EACH STATE. ADDITIONAL INFORMATION CAN BE OBTAINED FROM THE COMPANY.

REV.	DESCRIPTION	BY	DATE
A	PRELIMINARY	RMJ	03/31/25
0	100% CONSTRUCTION	RMJ	05/15/25

ATC SITE NUMBER:
310480

ATC SITE NAME:
WOODLAND-GRIFFITH

VERIZON WIRELESS SITE NAME:
ILANI

SITE ADDRESS:
2706 NW LACENTER RD
RIDGEFIELD, WA 98642-9263

SEAL: 05/15/25

verizon

DATE DRAWN:	05/15/25
ATC JOB NO:	15195377
CUSTOMER NAME:	ILANI
CUSTOMER ID:	5000021209

ANTENNA INFORMATION & SCHEDULE

SHEET NUMBER:	REVISION:
C-201	0

Copyright © 2025 ATC IP LLC, All Rights Reserved

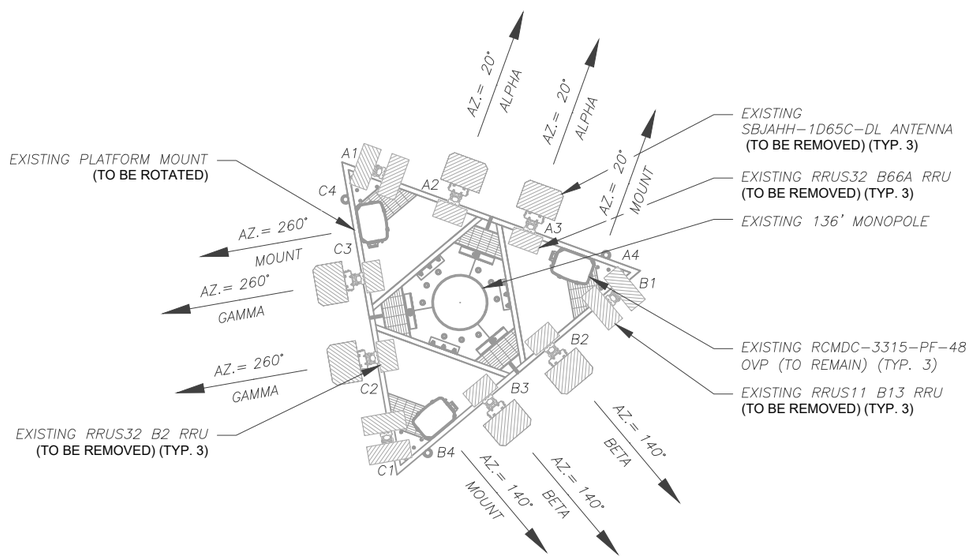

1 EXISTING ANTENNA PLAN

SCALE: N.T.S.

PER MOUNT ANALYSIS COMPLETED BY TOWER ENGINEERING SOLUTIONS, LLC, DATED MARCH 20, 2025, THE EXISTING MOUNT CAN ADEQUATELY SUPPORT THE PROPOSED LOADING.

POST-MODIFICATION INSPECTION (PMI) REQUIRED ON ALL SITES. REFER TO SHEET G-001 OF THESE CONSTRUCTION DRAWINGS, AS WELL AS THE MOUNT ANALYSIS PREPARED BY TOWER ENGINEERING SOLUTIONS, LLC, DATED MARCH 20, 2025 FOR ADDITIONAL DETAILS.

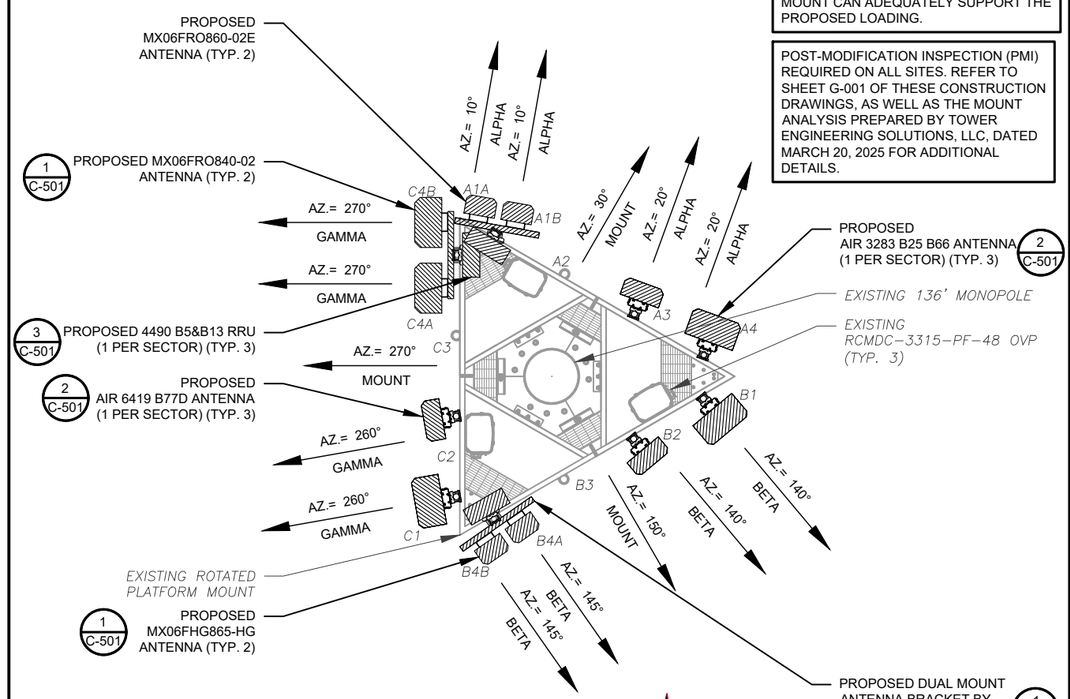

2 FINAL ANTENNA PLAN

SCALE: N.T.S.

EXISTING ANTENNA SCHEDULE

LOCATION			ANTENNA SUMMARY					NON ANTENNA SUMMARY	
SECTOR	RAD	AZ	POS	ANTENNA	BAND	MECH/ ELEC D-TILT	STATUS	ADDITIONAL TOWER MOUNTED EQUIPMENT	STATUS
ALPHA	135'	20°	A1	–	–	–	–	(2) RRUS 11 B13	RMV
			A2	SBJAHH-1D65C-DL	LTE 700/LTE1900/ LTE AWS/ LTE AWS3	*	RMV	(1) RRU 32 B2	RMV
			A3	SBJAHH-1D65C-DL	LTE 700/LTE1900/ LTE AWS/ LTE AWS3	*	RMV	(1) RRU 32 B66A	RMV
			A4	–	–	–	–	–	–
BETA	135'	140°	B1	–	–	–	–	(2) RRUS 11 B13	RMV
			B2	SBJAHH-1D65C-DL	LTE 700/LTE1900/ LTE AWS/ LTE AWS3	*	RMV	(1) RRU 32 B2	RMV
			B3	SBJAHH-1D65C-DL	LTE 700/LTE1900/ LTE AWS/ LTE AWS3	*	RMV	(1) RRU 32 B66A	RMV
			B4	–	–	–	–	–	–
GAMMA	135'	260°	C1	–	–	–	–	(2) RRUS 11 B13	RMV
			C2	SBJAHH-1D65C-DL	LTE 700/LTE1900/ LTE AWS/ LTE AWS3	*	RMV	(1) RRU 32 B2	RMV
			C3	SBJAHH-1D65C-DL	LTE 700/LTE1900/ LTE AWS/ LTE AWS3	*	RMV	(1) RRU 32 B66A	RMV
			C4	–	–	–	–	–	–

* – SEE RFDS FOR VALUES

NOTES

1. CONFIRM WITH VERIZON WIRELESS REP FOR APPLICABLE UPDATES/REVISIONS AND MOST RECENT RFDS FOR NSN CONFIGURATION (CONFIG). GC TO CAP ALL UNUSED PORTS.
2. CONFIRM SPACING OF PROPOSED EQUIP DOES NOT CAUSE TOWER CONFLICTS NOR IMPEDE TOWER CLIMBING PEGS.
3. TEP DID NOT VERIFY THE EXISTING LOADING. LOADING DATA PROVIDED BY ATC AND VERIZON WIRELESS.

STATUS ABBREVIATIONS

RMV: TO BE REMOVED
RMN: TO REMAIN
REL: TO BE RELOCATED
ADD: TO BE ADDED

CABLE LENGTHS FOR JUMPERS

JUNCTION BOX TO RRU: 15'
RRU TO ANTENNA: 10'

FINAL ANTENNA SCHEDULE

LOCATION			ANTENNA SUMMARY					NON ANTENNA SUMMARY	
SECTOR	RAD	AZ	POS	ANTENNA	BAND	MECH/ ELEC D-TILT	STATUS	ADDITIONAL TOWER MOUNTED EQUIPMENT	STATUS
ALPHA	137'	10°	A1A	MX06FRO860-02E	LTE 700/LTE 850/LTE 1900/LTE AWS/ LTE AWS3	*	ADD	(1) 4490 B5&B13	ADD
		10°	A1B	MX06FRO860-02E	LTE 700/LTE 850/LTE 1900/LTE AWS/ LTE AWS3	*	ADD		
		20°	A2	-	-	-	-	-	-
			A3	AIR 6419 B77D	5G CBAND	*	ADD	-	-
			A4	AIR 3283 B25 B66	LTE 1900/LTE AWS/LTE AWS3	*	ADD	-	-
BETA	137'	140°	B1	AIR 3283 B25 B66	LTE 1900/LTE AWS/LTE AWS3	*	ADD	-	-
			B2	AIR 6419 B77D	5G CBAND	*	ADD	-	-
			B3	-	-	-	-	-	-
		145°	B4A	MX06FHG865-HG	LTE 700/LTE 850/LTE 1900/LTE AWS/ LTE AWS3	*	ADD	(1) 4490 B5&B13	ADD
			B4B	MX06FHG865-HG	LTE 700/LTE 850/LTE 1900/LTE AWS/ LTE AWS3	*	ADD		
GAMMA	137'	260°	C1	AIR 3283 B25 B66	LTE 1900/LTE AWS/LTE AWS3	*	ADD	-	-
			C2	AIR 6419 B77D	5G CBAND	*	ADD	-	-
			C3	-	-	-	-	-	-
		270°	C4A	MX06FRO840-02	LTE 700/LTE 850/LTE 1900/LTE AWS/ LTE AWS3	*	ADD	(1) 4490 B5&B13	ADD
			C4B	MX06FRO840-02	LTE 700/LTE 850/LTE 1900/LTE AWS/ LTE AWS3	*	ADD		

* - SEE RFDS FOR VALUES

3 EQUIPMENT SCHEDULES

EXISTING FIBER DISTRIBUTION/OVP BOX		EXISTING CABLING SUMMARY		
MODEL NUMBER	STATUS	COAX/ELLIPTICAL	HYBRIFLEX	STATUS
(3) RCMDC-3315-PF-48	RMN	–	(3) 1-1/4"	RMN

FINAL FIBER DISTRIBUTION / OVP BOX		FINAL CABLING SUMMARY		
MODEL NUMBER	STATUS	COAX/ELLIPTICAL	HYBRIFLEX	STATUS
(3) RCMDC-3315-PF-48	RMN	–	(3) 1-1/4"	RMN

AMERICAN TOWER

TEP

TEP OPCO LLC
326 TRYON ROAD
RALEIGH, NC 27603-3530
OFFICE: (919) 661-6351

TEP IS A FAMILY OF COMPANIES LICENSED TO PROVIDE DIFFERENT SERVICES IN DIFFERENT JURISDICTIONS. DEPENDING ON THE JURISDICTION, PROFESSIONAL ENGINEERING AND LAND SURVEYING SERVICES ARE PROVIDED BY TEP OPCO LLC, A DELAWARE LIMITED LIABILITY COMPANY, TEP ENGINEERING, LLC, A NORTH CAROLINA PROFESSIONAL LIMITED LIABILITY COMPANY, OR M&H ENGINEERING, LLC, A NEW YORK PROFESSIONAL LIMITED LIABILITY COMPANY. GENERAL CONTRACTOR SERVICES ARE PROVIDED BY TEP OPCO LLC, A DELAWARE LIMITED LIABILITY COMPANY. WE ACQUIRE THE REQUISITE LICENSES IN EACH STATE. ADDITIONAL INFORMATION CAN BE OBTAINED FROM THE COMPANY.

REV.	DESCRIPTION	BY	DATE
A	PRELIMINARY	RMJ	03/31/25
0	100% CONSTRUCTION	RMJ	05/15/25

ATC SITE NUMBER:
310480

ATC SITE NAME:
WOODLAND-GRIFFITH

VERIZON WIRELESS SITE NAME:
ILANI

SITE ADDRESS:
2706 NW LACENTER RD
RIDGEFIELD, WA 98642-9263

TEP OPCO, LLC 3446

SEAL: 05/15/25

verizon

DATE DRAWN:	05/15/25
ATC JOB NO:	15195377
CUSTOMER NAME:	ILANI
CUSTOMER ID:	5000021209

ANTENNA INFORMATION & SCHEDULE

SHEET NUMBER:	REVISION:
C-401	0

Copyright © 2025 ATC IP LLC, All Rights Reserved

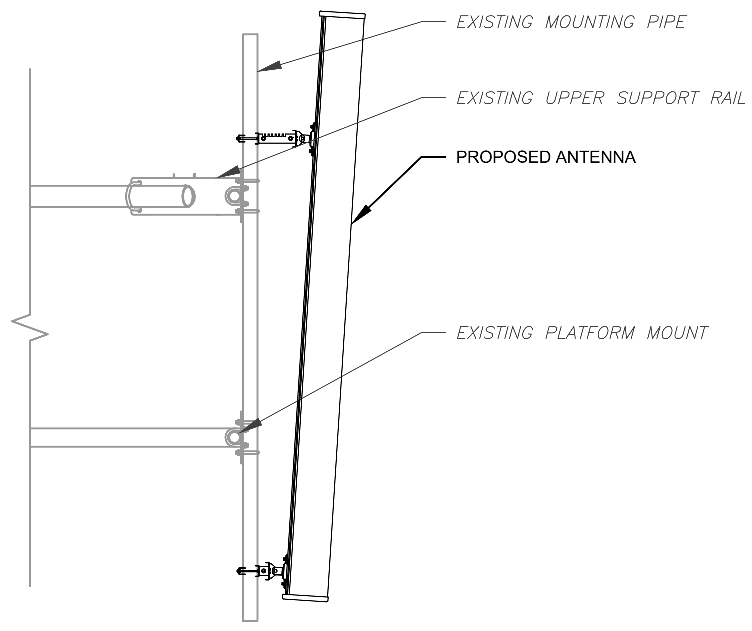

1 PROPOSED ANTENNA MOUNTING DETAIL
SCALE: N.T.S.

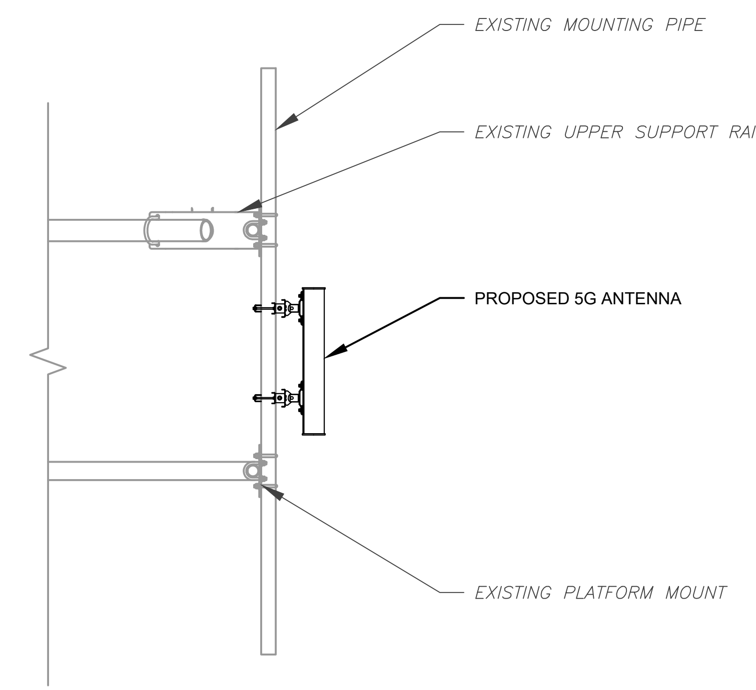

2 PROPOSED 5G ANTENNA MOUNTING DETAIL
SCALE: N.T.S.

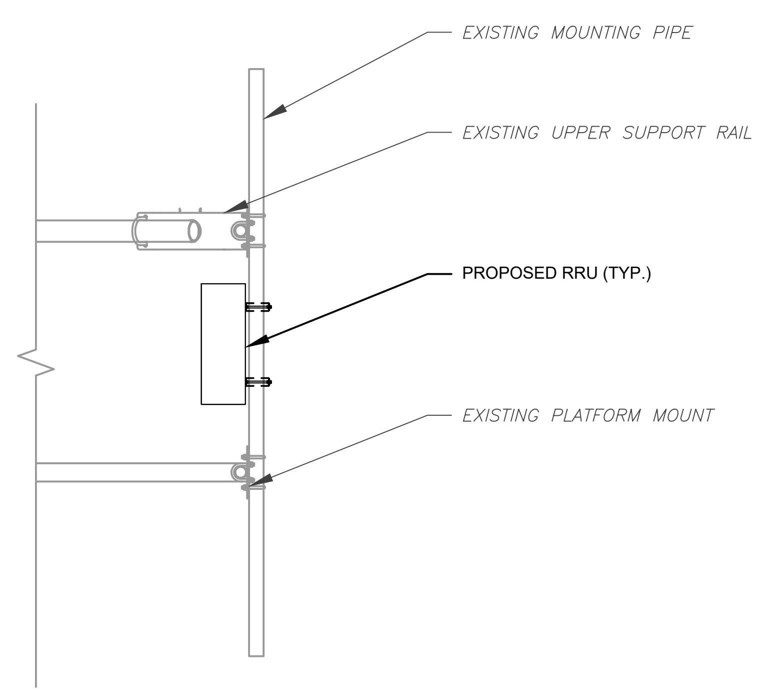

3 PROPOSED RRU MOUNTING DETAIL
SCALE: N.T.S.

AMERICAN TOWER

TEP

TEP OPCO LLC
326 TRYON ROAD
RALEIGH, NC 27603-3530
OFFICE: (919) 661-6351

TEP IS A FAMILY OF COMPANIES LICENSED TO PROVIDE DIFFERENT SERVICES IN DIFFERENT JURISDICTIONS. DEPENDING ON THE JURISDICTION, PROFESSIONAL ENGINEERING AND LAND SURVEYING SERVICES ARE PROVIDED BY TEP OPCO LLC, A DELAWARE LIMITED LIABILITY COMPANY, TEP ENGINEERING, LLC, A NORTH CAROLINA PROFESSIONAL LIMITED LIABILITY COMPANY, OR M&H ENGINEERING, LLC, A NEW YORK PROFESSIONAL LIMITED LIABILITY COMPANY. GENERAL CONTRACTOR SERVICES ARE PROVIDED BY TEP OPCO LLC, A DELAWARE LIMITED LIABILITY COMPANY. WE ACQUIRE THE REQUISITE LICENSES IN EACH STATE. ADDITIONAL INFORMATION CAN BE OBTAINED FROM THE COMPANY.

REV.	DESCRIPTION	BY	DATE
A	PRELIMINARY	RMJ	03/31/25
0	100% CONSTRUCTION	RMJ	05/15/25

ATC SITE NUMBER:
310480
ATC SITE NAME:
WOODLAND-GRIFFITH
VERIZON WIRELESS SITE NAME:
ILANI
SITE ADDRESS:
2706 NW LACENTER RD
RIDGEFIELD, WA 98642-9263

TEP OPCO, LLC 3446
STATE OF WASHINGTON
23027682
REGISTERED PROFESSIONAL ENGINEER
SEAL: 05/15/25

verizon

DATE DRAWN:	05/15/25
ATC JOB NO:	15195377
CUSTOMER NAME:	ILANI
CUSTOMER ID:	5000021209

CONSTRUCTION DETAILS

SHEET NUMBER: C-501
REVISION: 0

Copyright © 2025 ATC IP LLC, All Rights Reserved

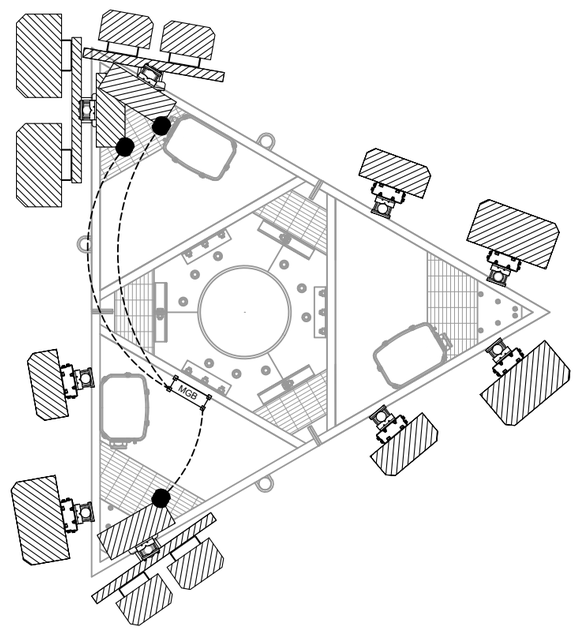

1 FINAL ANTENNA GROUNDING PLAN

SCALE: N.T.S.

N

LEGEND	
●	MECHANICAL CONNECTION
MGB	MASTER GROUND BAR

AMERICAN TOWER

TEP

TEP OPCO LLC
326 TRYON ROAD
RALEIGH, NC 27603-3530
OFFICE: (919) 661-6351

TEP IS A FAMILY OF COMPANIES LICENSED TO PROVIDE DIFFERENT SERVICES IN DIFFERENT JURISDICTIONS. DEPENDING ON THE JURISDICTION, PROFESSIONAL ENGINEERING AND LAND SURVEYING SERVICES ARE PROVIDED BY TEP OPCO LLC, A DELAWARE LIMITED LIABILITY COMPANY, TEP ENGINEERING, LLC, A NORTH CAROLINA PROFESSIONAL LIMITED LIABILITY COMPANY, OR M&H ENGINEERING, LLC, A NEW YORK PROFESSIONAL LIMITED LIABILITY COMPANY. GENERAL CONTRACTOR SERVICES ARE PROVIDED BY TEP OPCO LLC, A DELAWARE LIMITED LIABILITY COMPANY. WE ACQUIRE THE REQUISITE LICENSES IN EACH STATE. ADDITIONAL INFORMATION CAN BE OBTAINED FROM THE COMPANY.

REV.	DESCRIPTION	BY	DATE
A	PRELIMINARY	RMJ	03/31/25
0	100% CONSTRUCTION	RMJ	05/15/25

ATC SITE NUMBER:
310480

ATC SITE NAME:
WOODLAND-GRIFFITH

VERIZON WIRELESS SITE NAME:
ILANI

SITE ADDRESS:
2706 NW LACENTER RD
RIDGEFIELD, WA 98642-9263

SEAL: 05/15/25

verizon

DATE DRAWN:	05/15/25
ATC JOB NO:	15195377
CUSTOMER NAME:	ILANI
CUSTOMER ID:	5000021209

GROUNDING PLANS

SHEET NUMBER:	REVISION:
E-101	0

Copyright © 2025 ATC IP LLC, All Rights Reserved.

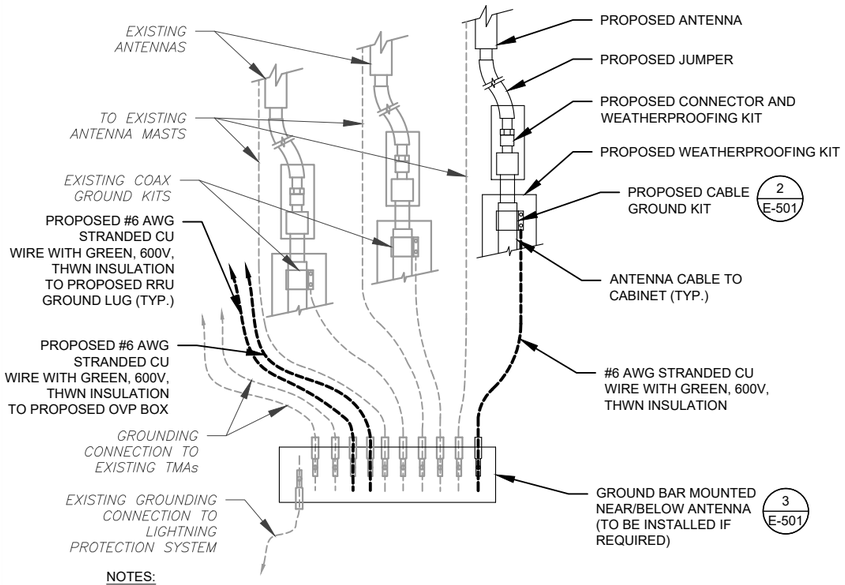

NOTES:

1. THIS DETAIL IS INTENDED TO SHOW THE GENERAL GROUNDING REQUIREMENTS. SLIGHT ADJUSTMENTS MAY BE REQUIRED BASED ON EXISTING SITE CONDITIONS. THE CONTRACTOR SHALL MAKE FIELD ADJUSTMENTS AS NEEDED AND INFORM THE CONSTRUCTION MANAGER OF ANY CONFLICTS.
2. SITE GROUNDING SHALL COMPLY WITH VERIZON WIRELESS GROUNDING STANDARDS, LATEST EDITION, AND COMPLY WITH VERIZON WIRELESS GROUNDING CHECKLIST, LATEST VERSION. WHEN NATIONAL AND LOCAL GROUNDING CODES ARE MORE STRINGENT THEY SHALL GOVERN.

1 TYPICAL ANTENNA GROUNDING DIAGRAM

SCALE: N.T.S.

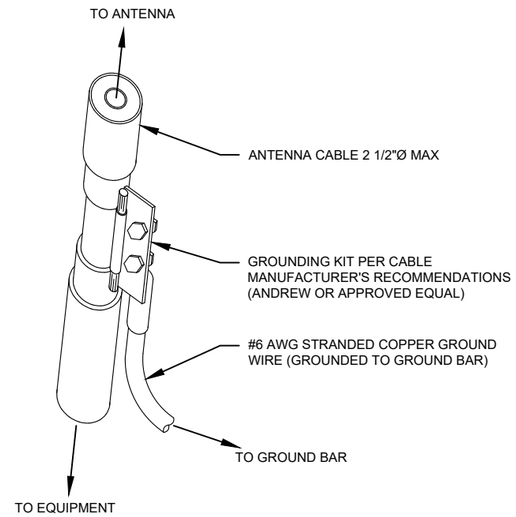

GROUND KIT NOTES:

1. DO NOT INSTALL CABLE GROUND KIT AT A BEND AND ALWAYS DIRECT GROUND WIRE DOWN TO GROUND BAR.
2. CONTRACTOR SHALL PROVIDE WEATHERPROOFING KIT (ANDREW PART NUMBER 221213) AND INSTALL/TAPE PER MANUFACTURER'S SPECIFICATIONS.

2 CABLE GROUND KIT CONNECTION DETAIL

SCALE: N.T.S.

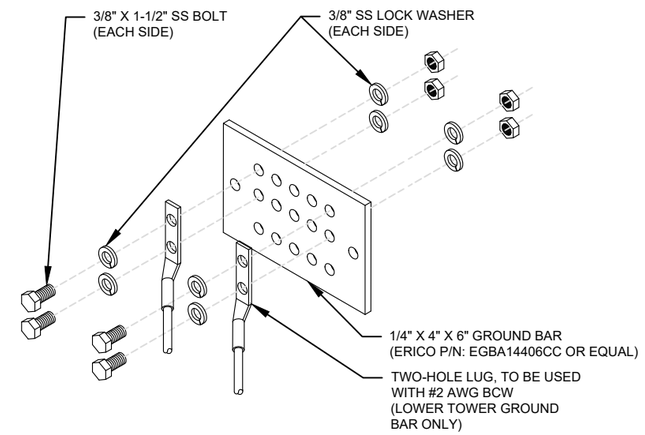

GROUND BAR NOTES:

1. GROUND BAR KITS COME WITH ALL HARDWARE, NUTS, BOLTS, WASHERS, ETC. EXCEPT THE STRUCTURAL MOUNTING MEMBER(S).
2. GROUND BAR TO BE BONDED DIRECTLY TO TOWER.

3 TOWER GROUND BAR DETAIL

SCALE: N.T.S.

AMERICAN TOWER

TEP

TEP OPCO LLC
326 TRYON ROAD
RALEIGH, NC 27603-3530
OFFICE: (919) 661-6351

TEP IS A FAMILY OF COMPANIES LICENSED TO PROVIDE DIFFERENT SERVICES IN DIFFERENT JURISDICTIONS. DEPENDING ON THE JURISDICTION, PROFESSIONAL ENGINEERING AND LAND SURVEYING SERVICES ARE PROVIDED BY TEP OPCO LLC, A DELAWARE LIMITED LIABILITY COMPANY, TEP ENGINEERING, LLC, A NORTH CAROLINA PROFESSIONAL LIMITED LIABILITY COMPANY, OR M&H ENGINEERING, LLC, A NEW YORK PROFESSIONAL LIMITED LIABILITY COMPANY. GENERAL CONTRACTOR SERVICES ARE PROVIDED BY TEP OPCO LLC, A DELAWARE LIMITED LIABILITY COMPANY. WE ACQUIRE THE REQUISITE LICENSES IN EACH STATE. ADDITIONAL INFORMATION CAN BE OBTAINED FROM THE COMPANY.

REV.	DESCRIPTION	BY	DATE
A	PRELIMINARY	RMJ	03/31/25
0	100% CONSTRUCTION	RMJ	05/15/25

ATC SITE NUMBER:
310480

ATC SITE NAME:
WOODLAND-GRIFFITH

VERIZON WIRELESS SITE NAME:
ILANI

SITE ADDRESS:
2706 NW LACENTER RD
RIDGEFIELD, WA 98642-9263

SEAL: 05/15/25

verizon

DATE DRAWN:	05/15/25
ATC JOB NO:	15195377
CUSTOMER NAME:	ILANI
CUSTOMER ID:	5000021209

GROUNDING DETAILS

SHEET NUMBER:	REVISION:
E-501	0

Copyright © 2025 ATC IP LLC, All Rights Reserved

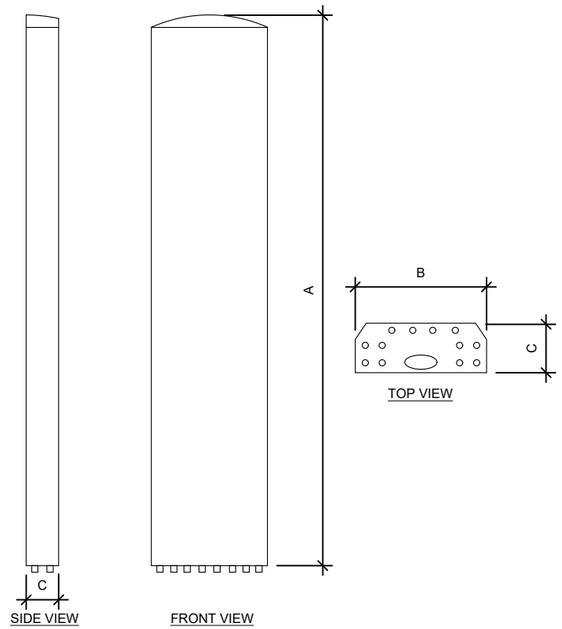

ANTENNA SPECIFICATIONS				
ANTENNA MODEL	A	B	C	WEIGHT (LBS)
MX06FRO840-02	95.9"	19.8"	10.7"	75.0
MX06FRO860-02E	95.9"	12.2"	7.5"	51.0
MX06FHG865-HG	96.9"	13.2"	8.5"	52.0
AIR 6419 B77D	28.3"	16.1"	7.3"	64.0
AIR 3283 B25 B66	47.2"	20.0"	10.9"	108.0

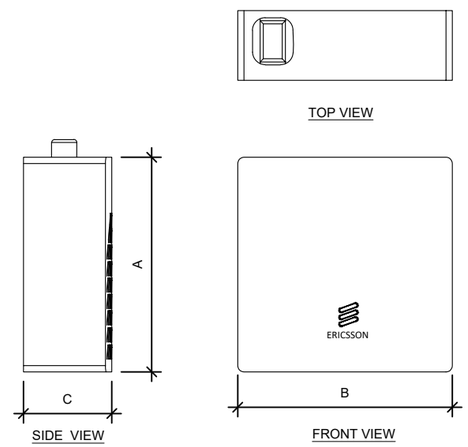

RRU SPECIFICATIONS				
RRU MODEL	A	B	C	WEIGHT (LBS)
4490 B5&B13 RRU	17.5"	15.1"	6.8"	68.0

- EQUIPMENT SPECIFICATIONS

SCALE: N.T.S.

SUPPLEMENTAL

SHEET NUMBER:	REVISION:
R-601	-

Copyright © 2025 ATC IP LLC, All Rights Reserved

Product Specifications

91900314

Dual-mount antenna bracket

Dual-mount antenna bracket

- Enables optimal spacing for low-band 4T4R beamforming by allowing for two of the same antenna on one bracket
- Mechanical tilt in line with specified antenna
- Spacing achieved can be 3/4”, 2”, or 12” (edge-to-edge) dependent on antenna model
- Compatible with MX*, MC*, X7C*, C7C* antenna ranges

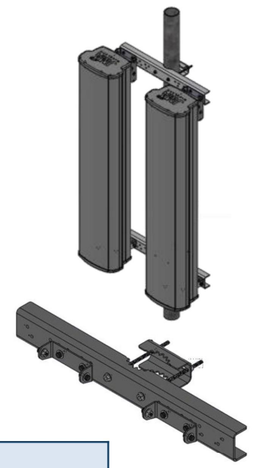

Dual-mount bracket assembled

Spacing options between dual antennas	
X7C* and C7C* models	2 of same antennas locked at 2” spacing
	Example: (2) X7CQAP-FRO-645-V can be locked at 2” of spacing
MX*, MC* models	2 of same antennas locked at 3/4”, 2”, or 12” spacing
	Example: (2) MX08FRO660-02 can be locked at 2” or 12” spacing (see above image)

Brackets needed per antenna type				
X7C* and C7C* models	**All 4’ and these 6’ antennas:**			
	X7CQAP-FRO-645-V X7CQAP-FRO-660-V X7CQAP-665-V C7CQCAP-FRO-656-V	X7CAP-665-V X7C-FRO-640-V X7C-FRO-660-V	X7C-665-V X7C-680-V C7C-FRO-656-V	91900314-02 (2 brackets needed)
	All 8’ and this 6’ antenna:			
	X7CAP-FRO-640-V			91900314-03 (3 brackets needed)
MX*, MC* models	**4’, 6’ antennas**			91900314-02
	8’ antennas			91900314-03

Mechanical specifications	
Weight per bracket, lb (kg)	28 lb (12.7 kg) – dual mount bracket parts only
Range of allowable mechanical up/down tilt	Tilt range is not affected by dual mount bracket (see antenna datasheet)
Rated wind survival speed, mph (km/h)	150 mph (241 km/h)
Material specification	0.16” to 0.25” thick hot-dipped, galvanized steel

Ordering information	
Mounting bracket model	**Description**
91900314-01	Single dual-mount antenna bracket assembly (see table above, “Brackets per antenna type”)
91900314-02	Two dual-mount antenna bracket assemblies
91900314-03	Three dual-mount antenna bracket assemblies
***Compatible antennas**	
4’–8’ Quad-, Hex-, and Octo-Port macro antennas in the X7C; C7C; X7CAP; C7CAP; X7CQAP; MX, MC models	
Installation instructions	
81900506	Installation instructions for dual-mount bracket assembly (comes with kit)

brands, and logos are trademarks™ or registered® trademarks of their respective holders. All specifications are subject to change without notice. Revised: August 2, 2023

Product Specifications

91900314

Dual-mount antenna bracket

Dual-mount bracket assembly guide overview

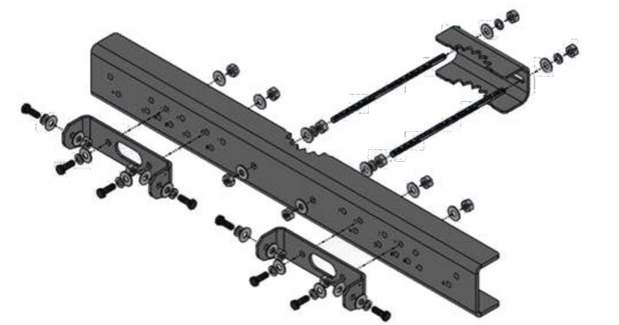

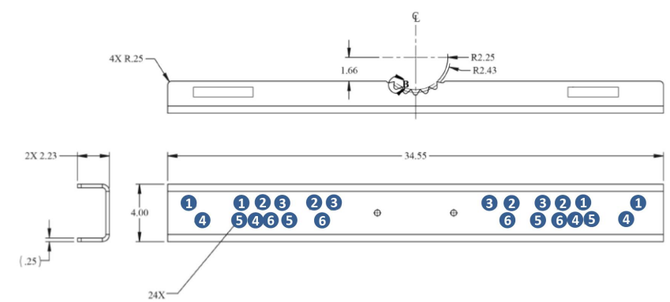

Model types beginning with:	Antenna width	Corresponding hole position	Resulting spacing between antennas
MX*, MC*	15.4” (wide spacing)	1	12”
	15.4” (narrow spacing)	2	2”
	12”	3	2”
	20”	5	3/4”
X7C*, C7C*	12.5”	3	2”
	24.0”	4	2”
	18.8”	5	2”
	14.6”	6	2”

©2023 JMA Wireless. All rights reserved. This document contains proprietary and confidential information. All products, company names, brands, and logos are trademarks™ or registered® trademarks of their respective holders. All specifications are subject to change without notice. Revised: August 2, 2023

1 PROPOSED DUAL MOUNT ANTENNA BRAKET DETAIL

SCALE: N.T.S.

NOTE: THIS SHEET WAS CREATED BY OTHERS AND PROVIDED AT THE REQUEST OF THE CUSTOMER WITHOUT EDIT.

Copyright © 2025 ATC IP LLC, All Rights Reserved

SUPPLEMENTAL

SHEET NUMBER:	REVISION:
R-602	-

Tower Engineering Solutions, LLC
1320 Greenway Dr. Suite 600
Irving, TX 75038
972.483.0607
TESOrders@testower.us

Antenna Mount Analysis Report and PMI Requirements

Mount ReAnalysis-VZW

SMART Tool Project #: 10286611

March 20, 2025

Site Information

Site ID:	*5000021209-VZW*
Site Name:	*Ilani - A*
Carrier Name:	*Verizon Wireless*
Address:	*2706 NW La Center Rd* *lacenter, Washington 98628, Clark County*
Latitude:	*45.852944°*
Longitude:	*-122.698306°*

Structure Information

Tower Type:	*Monopole*
Mount Type:	*Platform w/Support Rail*

FUZE ID # 16270187

Analysis Results

(1) Platform w/Support Rail: **45.3% [Pass*]**

***Antennas and equipment to be installed in compliance with PMI Requirements of this mount analysis.**

******Contractor PMI Requirements*:**
Included at the end of this MA report
Available & Submitted via portal at https://pmi.vzwsmart.com

For additional questions and support, please reach out to:
pmisupport@testower.us

Report Prepared By: Avinash Gupta

ESTEBAN VALDERRAMA
STATE OF WASHINGTON
24013161
REGISTERED
PROFESSIONAL ENGINEER

Esteban Valderrama
Digitally signed by Esteban Valderrama
Date: 2025.03.21 13:56:57 -05'00'

Analysis Results:

Component	Utilization %	Pass/Fail
Face Horizontal	23.5 %	Pass
Plan Bracing	43.5 %	Pass
Support Rail Members	25.9 %	Pass
Support Rail	45.3 %	Pass
Standoff Arm	5.5 %	Pass
Mount Pipe	42.8 %	Pass
Ovp Pipe	8.5 %	Pass

Structure Rating – *(Controlling Utilization of all Components)*	**45.3%**

Mount Steel (EPA)a per ANSI/TIA-222-H Section 2.6.11.2:

Ice Thickness (In)	Mount Pipes Excluded		Mount Pipes Included	
	Front (EPA)a (Sq. Ft.)	Side (EPA)a (Sq. Ft.)	Front (EPA)a (Sq. Ft.)	Side (EPA)a (Sq. Ft.)
0	50.8	49.9	73.1	72.1
0.5	61.4	61.9	93.8	92.8
1	71.5	72.1	113.4	112.2

Notes:
- (EPA)a values listed above may be used in the absence of more precise information
- (EPA)a values in the table above include 3 sector(s).
- Ka factors included in (EPA)a calculations

Requirements:

The existing mount is **SUFFICIENT** for the final loading configuration shown in attachment 2 and do not require modifications. Additional requirements are noted below.

N/A

If required, ANSI/ASSP rigging plan review services compliant with the requirements of ANSI/TIA 322 are available for a Construction Class IV site or other. Separate review fees will apply.

Attachments:

1. **Contractor Required Post Installation Inspection (PMI) Report Deliverables**
2. Antenna Placement Diagrams
3. Mount Photos
4. Analysis Calculations

NOTE: THIS SHEET WAS CREATED BY OTHERS AND PROVIDED AT THE REQUEST OF THE CUSTOMER WITHOUT EDIT. PLEASE REFERENCE THE MOUNT ANALYSIS REPORT FOR COMPLETE MOUNT ANALYSIS CALCULATIONS AND DETAILS. SUPPLEMENTAL PAGES INCLUDED IN THE CONSTRUCTION DRAWINGS ARE FOR REFERENCE ONLY. GENERAL CONTRACTOR IS TO VERIFY THEY HAVE THE MOST RECENT MOUNT ANALYSIS PRIOR TO CONSTRUCTION.

SUPPLEMENTAL

SHEET NUMBER:	REVISION:
R-603	-

Copyright © 2025 ATC IP LLC, All Rights Reserved