PUBLIC WORKS SITE IMPROVEMENTS

LA CENTER, WASHINGTON

291 EAST IVY AVENUE

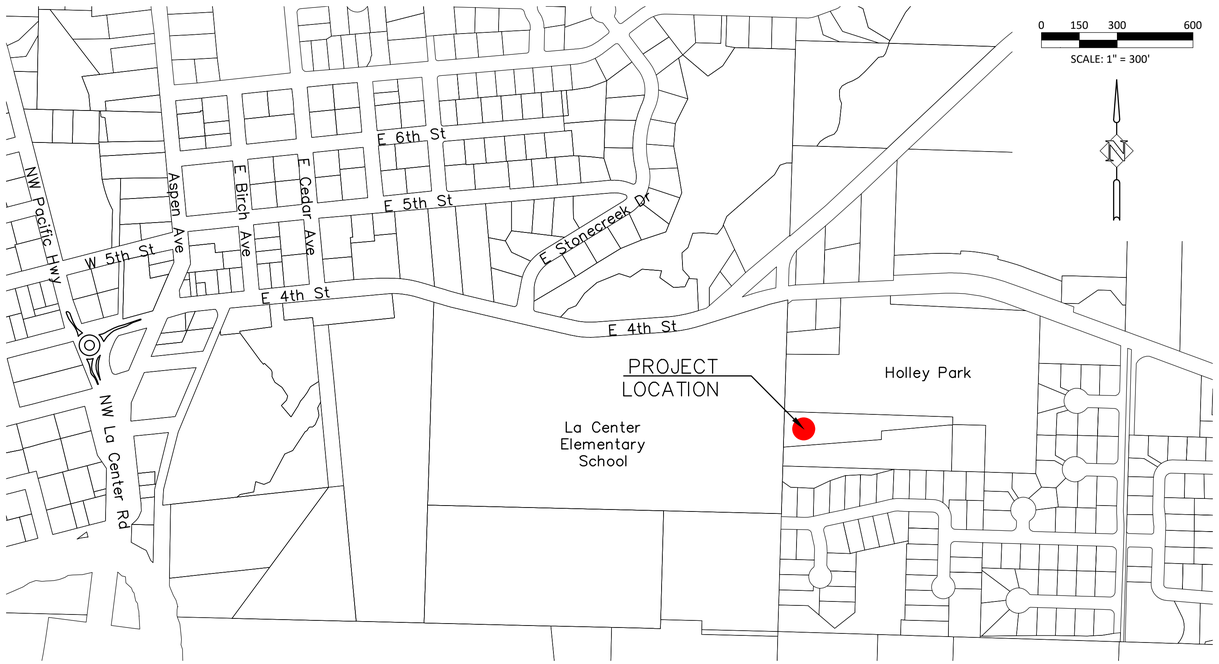

VICINITY MAP

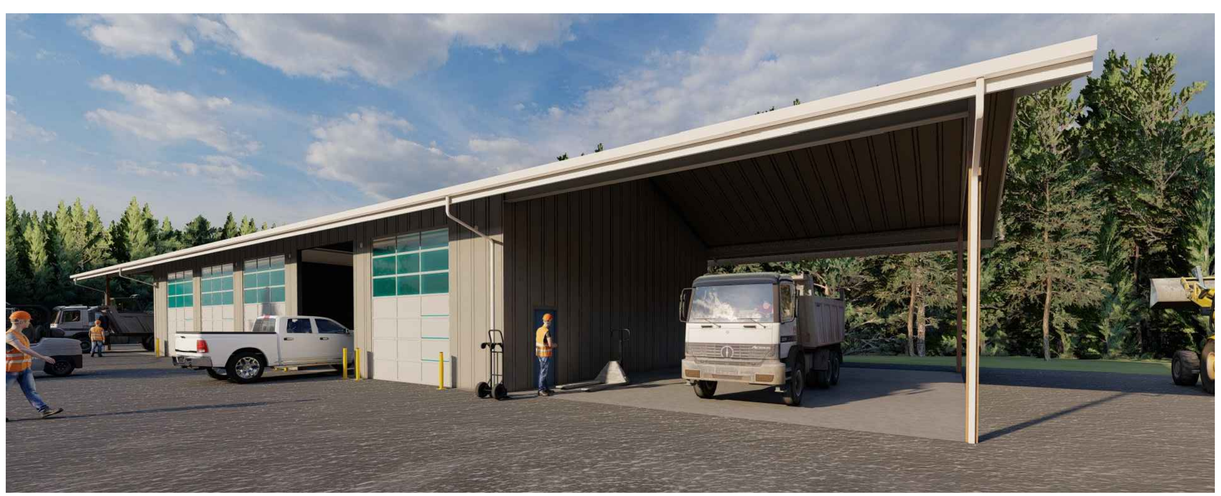

SHEET INDEX

G1.0	COVER SHEET	B1.00	GENERAL NOTES
E1.0	EXISTING CONDITIONS	B1.01	SHOP RENDERING
E1.1	DEMOLITION PLAN	B1.02	SHOP FLOOR PLAN & ROOF PLAN
C1.0	SITE PLAN	B1.03	SHOP ELEVATIONS
C1.1	GRADING PLAN	B1.04	SHOP SECTIONS
C1.2	RETAINING WALL PLAN AND PROFILE	S1.00	STRUCTURAL NOTES
C1.3	STORM DRAINAGE PLAN	S1.01	STRUCTURAL NOTES
C1.4	SANITARY SEWER PLAN	S1.02	FOUNDATION PLAN & ROOF FRAMING PLAN
C1.5	RESTORATION PLAN	S2.00	STRUCTURAL DETAILS
D1.0	DETAILS	S2.01	STRUCTURAL DETAILS
D1.1	DETAILS	S2.02	STRUCTURAL DETAILS
D1.2	DETAILS	S3.00	RETAINING WALL DETAILS
D1.3	DETAILS	S4.00	COVERED PARKING FOUNDATION & ROOF PLAN
D1.4	DETAILS	S4.01	COVERED PARKING ELEVATIONS & SECTIONS
M1.0	RIPARIAN BUFFER MITIGATION PLAN		

PROJECT OWNER

CITY OF LA CENTER
CONTACT: TRACY COLEMAN
210 E 4TH STREET
LA CENTER, WA 98629
TEL: 360-263-2889
EMAIL: TCOLEMAN@@CI.LACENTER.WA.US

CIVIL ENGINEER

HARPER HOUF PETERSON RIGHELLIS INC.
CONTACT: DALLIN WISE, P.E.
1220 MAIN STREET, SUITE 150
VANCOUVER, WA 98660
TEL: 360-750-1131
EMAIL: DALLINW@HHPR.COM

STRUCTURAL ENGINEER

HARPER HOUF PETERSON RIGHELLIS INC.
CONTACT: JEFF SCHWINDT, P.E., S.E.
205 SE SPOKANE, SUITE 200
PORTLAND, OR 97202
TEL: 503-221-1131
EMAIL: JEFFS@HHPR.COM

GENERAL NOTES:

ALL CONSTRUCTION, MATERIALS, AND WORKMANSHIP SHALL CONFORM TO THE CITY OF LA CENTER ENGINEERING STANDARDS AND THE LATEST EDITION OF "STANDARD SPECIFICATIONS FOR ROAD, BRIDGE, AND MUNICIPAL CONSTRUCTION" AS PREPARED BY WSDOT AND APWA.

ALL MATERIALS AND WORK ARE SUBJECT TO INSPECTION AND APPROVAL BY THE CITY OF LA CENTER'S DEPARTMENT OF PUBLIC WORKS (360) 263-7665.

THE CONTRACTOR SHALL NOTIFY THE PUBLIC WORKS DEPARTMENT AT LEAST 48 HOURS PRIOR TO THE START OF CONSTRUCTION.

THE CONTRACTOR SHALL COORDINATE AND ATTEND A PRE-CONSTRUCTION CONFERENCE WITH THE CITY OF LA CENTER PUBLIC WORKS DEPARTMENT PRIOR TO COMMENCING CONSTRUCTION.

ANY DEVIATIONS FROM THE PLANS WILL REQUIRE A WRITTEN REQUEST FROM THE CONTRACTOR AND APPROVAL BY THE PUBLIC WORKS DIRECTOR.

THE CONTRACTOR SHALL OBTAIN ALL REQUIRED PERMITS AND LICENSES BEFORE STARTING CONSTRUCTION.

CONTRACTOR SHALL KEEP AN APPROVED SET OF PLANS ON THE PROJECT SITE AT ALL TIMES.

ALL PIPE BEDDING MATERIAL SHALL MEET THE APPLICABLE SPECIFICATIONS IN THE CITY OF LA CENTER STANDARDS. BEFORE ANY NATIVE MATERIAL IS USED, LABORATORY TEST RESULTS SHALL BE PROVIDED TO THE CITY INSPECTOR INDICATING THAT THE MATERIAL MEETS THE SPECIFICATIONS.

PIPE BEDDING AND BACKFILL SHALL BE PER CITY OF LA CENTER STANDARDS. BACKFILL MATERIAL SHALL BE COMPACTED TO 95% MAXIMUM RELATIVE DENSITY.

SHOULD ANY ITEM OF ARCHAEOLOGICAL INTEREST BE FOUND DURING DEVELOPMENT, YOU ARE REQUIRED TO STOP WORK AND NOTIFY THE CITY INSPECTOR AND THE WASHINGTON STATE OFFICE OF ARCHAEOLOGY AND HISTORIC PRESERVATION AT (360) 753-4011 IMMEDIATELY. FAILURE TO DO SO COULD RESULT IN A FELONY CONVICTION.

AT THE END OF EACH WORK DAY THE CONTRACTOR SHALL CLEAN UP THE PROJECT AREA AND LEAVE IT IN A NEAT AND SECURED MANNER. UPON COMPLETION, THE CONTRACTOR SHALL LEAVE THE PROJECT AREA FREE OF DEBRIS AND UNUSED MATERIAL.

THE CONTRACTOR SHALL PRUNE ALL VEGETATION, AS NECESSARY, AWAY AND UP FROM THE WORK AS WELL AS ANY ROOT PRUNING AS DETERMINED BY THE ENGINEER. THE CONTRACTOR SHALL PROTECT ALL EXISTING LANDSCAPING THAT IS TO REMAIN.

THE CONTRACTOR SHALL MAKE EVERY REASONABLE EFFORT TO PROTECT ANY EXISTING CONCRETE CURBS AND SIDEWALKS TO REMAIN AND SHALL REPLACE DAMAGED CURBS AND SIDEWALKS AT NO ADDITIONAL COST.

THE CONTRACTOR SHALL PROTECT EXISTING UTILITIES. ALL DISTURBED UTILITIES SHALL BE REPAIRED AS DIRECTED. ALL RELOCATED UTILITIES WILL BE RESET IN ACCORDANCE WITH THE APPROPRIATE AGENCY OR OWNER'S STANDARDS AND SPECIFICATIONS. THE CONTRACTOR SHALL BE RESPONSIBLE FOR THE REPAIR OF EXISTING UTILITY LINES DAMAGED OR DESTROYED THROUGH NEGLIGENCE AND/OR INATTENTION.

CONTRACTOR SHALL REPORT ALL DAMAGES IMMEDIATELY TO THE PUBLIC WORKS DIRECTOR'S OFFICE OR CONTACT THE INSPECTOR ON THE JOB.

COVER SHEET
PUBLIC WORKS SITE IMPROVEMENTS
LA CENTER, WASHINGTON

Harper Houf Peterson Righellis Inc.
ENGINEERS • PLANNERS
LANDSCAPE ARCHITECTS • SURVEYORS
1220 Main Street, Suite 150, Vancouver, WA 98660
phone: 360.750.1141 www.hhpr.com fax: 360.750.1141

DALLIN J. WISE
STATE OF WASHINGTON
21015676
REGISTERED
PROFESSIONAL ENGINEER
10/3/2025

DESIGNED:	DJW
DRAWN:	DJW
CHECKED:	BMH
DATE:	10/3/2025

DATE	NO.	DESCRIPTION

REVISIONS

SHEET NO.
G1.0

JOB NO.
CLC-07

P:\02-Vancouver\CLC (City of La Center)\CLC-07 (Public Works Operation Center)\CIL\C07-DWGS\Sheets\ G1.0 -COVER SHEET.dwg

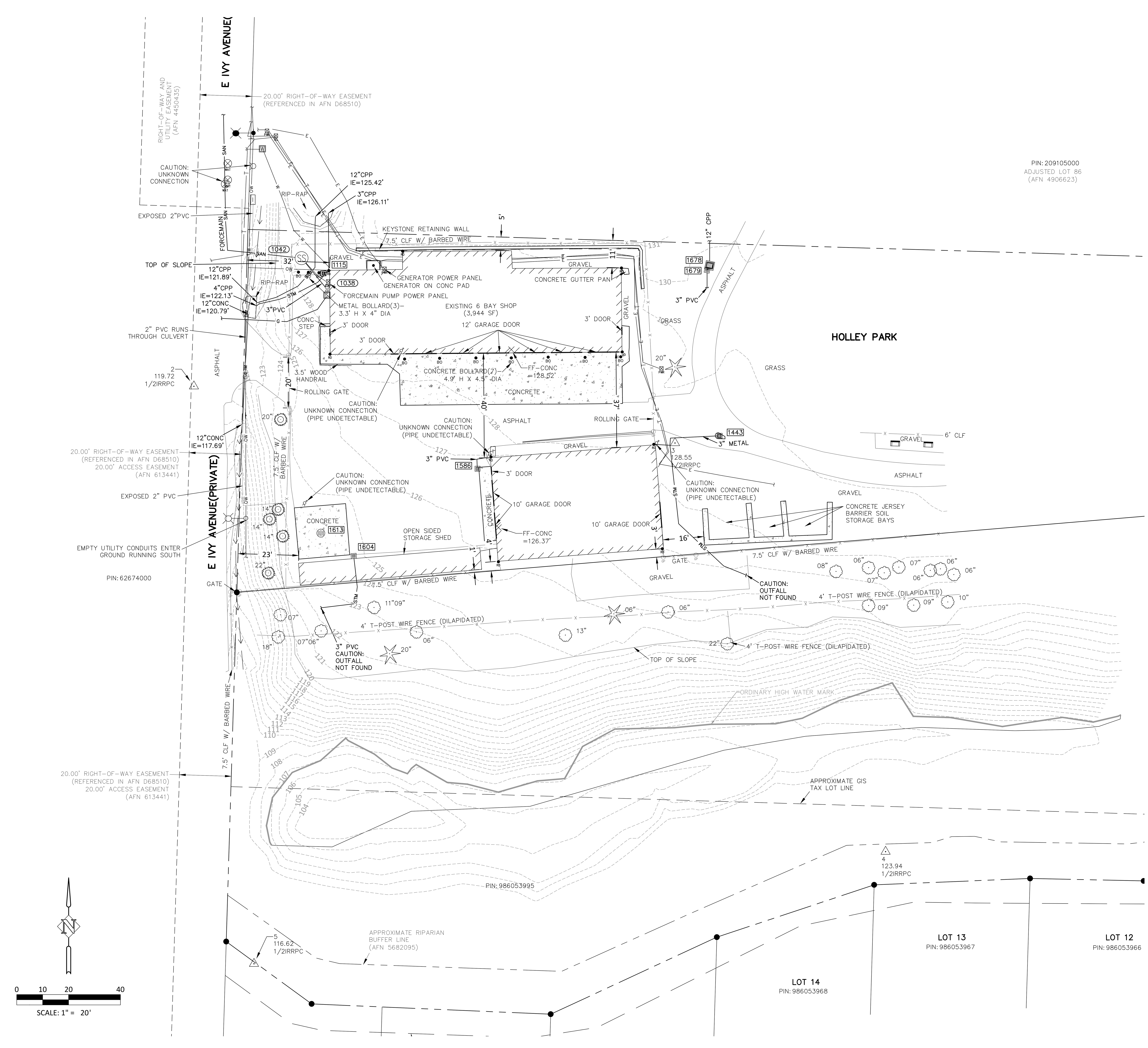

HORIZONTAL DATUM:

WASHINGTON STATE PLANE (SOUTH ZONE) – REFERENCE FRAME: NAD 83 (2011)(EPOCH: 2010.0000), US SURVEY FEET. ALL DISTANCES ARE GROUND.

VERTICAL DATUM:

NORTH AMERICAN VERTICAL DATUM OF 1988

STORM SEWER NOTES

1115	AREA DRAIN SQUARE RIM=128.18' IE 3" CPP AT SWEEP=126.08'
1443	AREA DRAIN SQUARE W/ OIL TRAP RIM=128.40' IE 3" METAL SLEEVE(W)=127.70' BOTTOM=126.70'
1586	AREA DRAIN SQUARE RIM=126.10' IE 3" PVC(N)=125.40' BOTTOM=124.85'
1604	AREA DRAIN SQUARE RIM=124.66' IE 3" PVC(S)=124.06' BOTTOM=123.86'
1613	CATCH BASIN ROUND W/ BIO BAG (2' DIAMETER PVC DRY WELL) RIM=124.63' BOTTOM=118.43'
1678	CATCH BASIS SQUARE RIM=129.56' IE 3" PVC(S)=127.46' IE 12" CPP(N)=127.46' BOTTOM=127.46'
1679	AREA DRAIN SQUARE RIM=129.40' IE 3" PVC(S)=128.70' IE 3" PVC(N)=128.70' BOTTOM=128.30'

SANITARY SEWER NOTES

1038	SANITARY CLEANOUT RIM=128.46'(1.00' ABOVE PAVEMENT) IE 3" PVC AT SWEEP(NW)=126.41'
1042	SANITARY MANHOLE (FM PUMP W/ PLASTIC LID) RIM=129.08' UNABLE TO MEASURE
1070	SANITARY CLEANOUT (LOCATE WIRE FOR FM) UNABLE TO MEASURE

TOPOGRAPHIC LEGEND:

- STORM SEWER LINE
- SANITARY SEWER LINE
- WATER LINE
- GAS LINE
- OVERHEAD WIRE
- FENCE LINE, TYPE AS NOTED
- TELEPHONE LINE
- IRRIGATION LINE
- ELECTRIC LINE
- FLOWLINE
- BUILDING LINE
- UTILITY LINE IS BELIEVED TO CONTINUE, CONNECTION NOT LOCATED OR UNKNOWN
- SANITARY SEWER MANHOLE
- CLEANOUT
- STORM SEWER MANHOLE
- CATCH BASIN SQUARE
- CATCH BASIN ROUND
- AREA DRAIN SQUARE
- ROOF DRAIN DOWN SPOUT
- WATER VALVE
- FIRE HYDRANT
- WATER METER
- HOSE BIB / WATER SPIGOT
- IRRIGATION BOX
- GAS METER
- POWER RISER
- TELEPHONE RISER
- HHPR CONTROL POINT (# ELEV. DESC.)
- GUY WIRE
- UTILITY POLE W/ STREET LIGHT
- UTILITY POLE W/ UNDERGROUND UTILITIES AND STREET LIGHT
- SINGLE POST SIGN
- BENCH
- GATE POST
- BOLLARD
- CONIFEROUS TREE (APPROXIMATE DIAMETER BREAST HIGH AS NOTED)
- DECIDUOUS TREE (APPROXIMATE DIAMETER BREAST HIGH AS NOTED)
- STUMP – APPROXIMATE DIAMETER ON TOP, OR DBH, IF OVER 4' TALL.
- SURVEY MONUMENT DO NOT DISTURB

NOTE: SYMBOLS SHOWN HEREON ARE FOR GRAPHICAL REPRESENTATION PURPOSES AND DO NOT NECESSARILY SHOW SHAPE, SIZE, ROTATION, CONDITION, TYPE, ETC. OF THE ACTUAL PHYSICAL IMPROVEMENTS THAT THEY REPRESENT. CONDITION, TYPE, ROTATION, ETC. MAY VARY AMONGST ITEMS SHOWN BY THE SAME SYMBOL.

EXISTING CONDITIONS
PUBLIC WORKS SITE IMPROVEMENTS
LA CENTER, WASHINGTON

Harper Houf Peterson Righellis Inc.
ENGINEERS • PLANNERS
LANDSCAPE ARCHITECTS • SURVEYORS
1220 Main Street, Suite 150, Vancouver, WA 98660
phone: 360.750.1131 www.hhpr.com fax: 360.750.1141

STATE OF WASHINGTON PROFESSIONAL ENGINEER 21015676 REGISTERED 10/3/2025

DESIGNED:	DRAWN:	CHECKED:	DATE:
DJW	DJW	BMH	10/3/2025

REVISIONS

DATE	NO.	DESCRIPTION

SHEET NO.

E1.0

JOB NO. CLC-07

P:\02-Vancouver\CLC (City of La Center)\CLC-07 (Public Works Operation Center)\CLC07-DWGS\Sheets\ E1.0 - EXISTING CONDITIONS.dwg

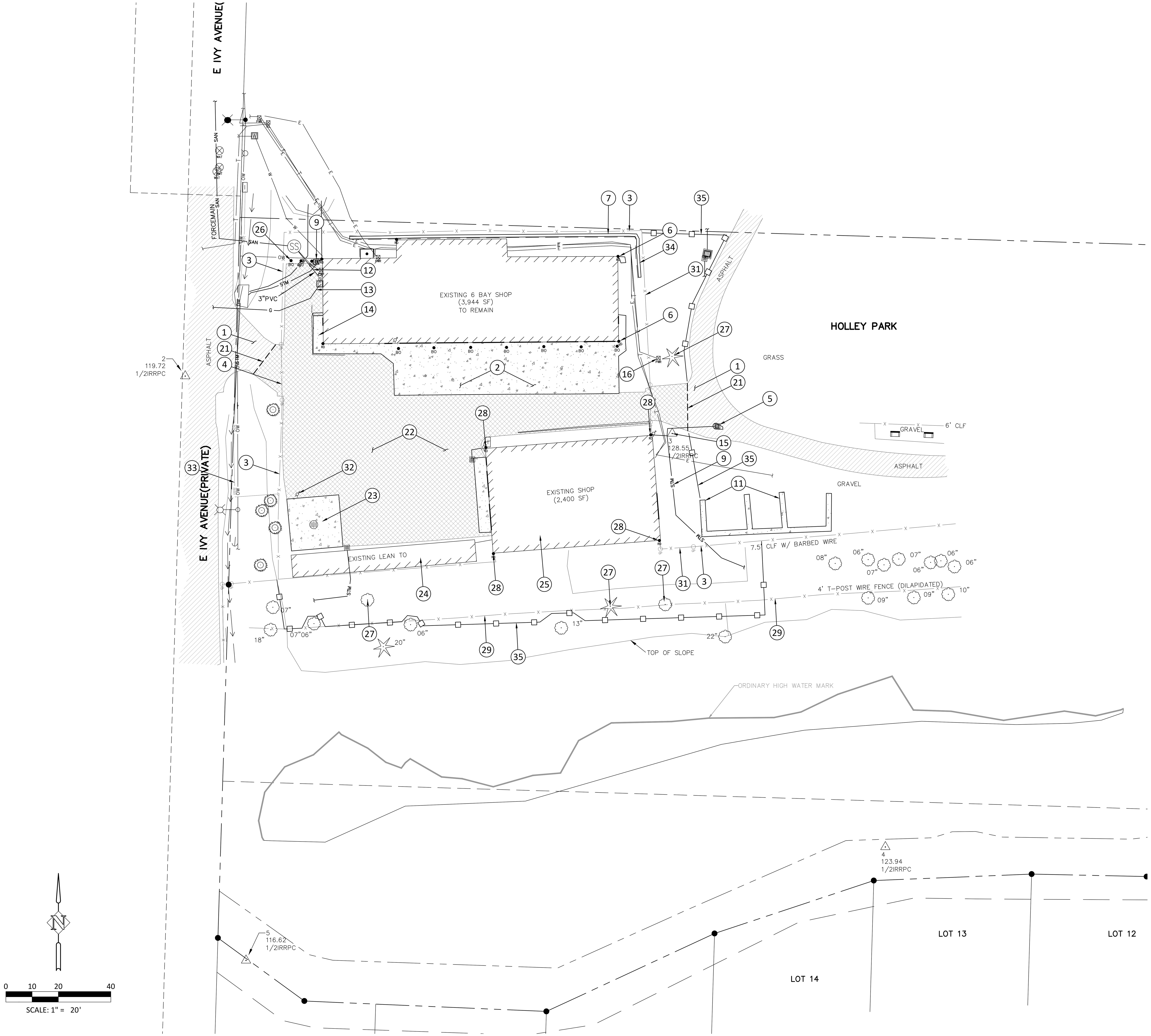

CONSTRUCTION NOTES:

1. PROTECT EXISTING ASPHALT PAVEMENT.
2. PROTECT EXISTING CONCRETE APRON.
3. PROTECT EXISTING FENCE.
4. PROTECT EXISTING GATE.
5. PROTECT EXISTING CATCH BASIN.
6. PROTECT EXISTING ROOF DRAIN.
7. PROTECT EXISTING LANDSCAPE WALL.
9. PROTECT EXISTING STORM DRAIN.
11. PROTECT EXISTING STORAGE BAYS.
12. PROTECT EXISTING SANITARY LINE.
13. PROTECT EXISTING GAS LINE.
14. PROTECT EXISTING CONCRETE WALK AND STEPS.
15. SURVEY MONUMNET SHALL BE PROTECTED OR REMOVED AND REPLACED IN ACCORDANCE WITH WAC 332-120. CONTACT PROJECT SURVEYOR PRIOR TO DISTURBANCE.
16. EXISTING POWER PANEL TO BE RELOCATED, SEE SHEET C1.0.
21. SAWCUT EXISTING PAVEMENT TO CREATE A CLEAN VERTICAL EDGE.
22. REMOVE EXISTING ASPHALT PAVEMENT.
23. REMOVE EXISTING CONCRETE PAD, BASIN, AND CONNECTED DRAINS.
24. REMOVE EXISTING LEAN-TO STRUCTURE.
25. DEMOLISH EXISTING SHOP, FOUNDATION, AND APPURTENANCES. DISCONNECT UTILITIES PRIOR TO DEMOLITION. ALL WORK SHALL COMPLY WITH THE TECHNICAL SPECIFICATIONS AND ALL APPLICABLE STATE AND LOCAL REGULATIONS.
26. REMOVE EXISTING BOLLARDS.
27. REMOVE EXISTING TREE/BUSH.
28. REMOVE EXISTING ROOF DRAIN AND ASSOCIATED PIPES.
29. REMOVE EXISTING FENCE.
31. SALVAGE FENCE AND/OR GATE FOR REINSTALLATION.
32. SALVAGE HOSE HYDRANT FOR REINSTALLATION.
33. REMOVE AND DECOMISSION PVC WATER LINE.
34. SALVAGE LANDSCAPE BLOCKS FOR REINSTALLATION.
35. INSTALL HIGH VISIBILITY SILT FENCE PER DETAIL ON SHEET C5.04.

LEGEND

(hatch)	EXISTING ASPHALT
(hatch)	ASPHALT DEMOLITION
(line)	HIGH VISIBILITY SILT FENCE

SITE PREPARATION PLAN
PUBLIC WORKS SITE IMPROVEMENTS
LA CENTER, WASHINGTON

Harper Houf Peterson Righellis Inc.
ENGINEERS • PLANNERS
LANDSCAPE ARCHITECTS • SURVEYORS
1220 Main Street, Suite 150, Vancouver, WA 98660
phone: 360.750.1131 www.hhpr.com fax: 360.750.1141

STATE OF WASHINGTON PROFESSIONAL ENGINEER 21015676 REGISTERED 10/3/2025

DESIGNED:	DJW
DRAWN:	DJW
CHECKED:	BMH
DATE:	10/3/2025

REVISIONS

DATE	NO.	DESCRIPTION

SHEET NO. E1.1

JOB NO. CLC-07

P:\02-Vancouver\CLC (City of La Center)\CLC-07 (Public Works Operation Center)\CLC07-DWGS\Sheets\ E1.1 - DEMOLITION PLAN.dwg

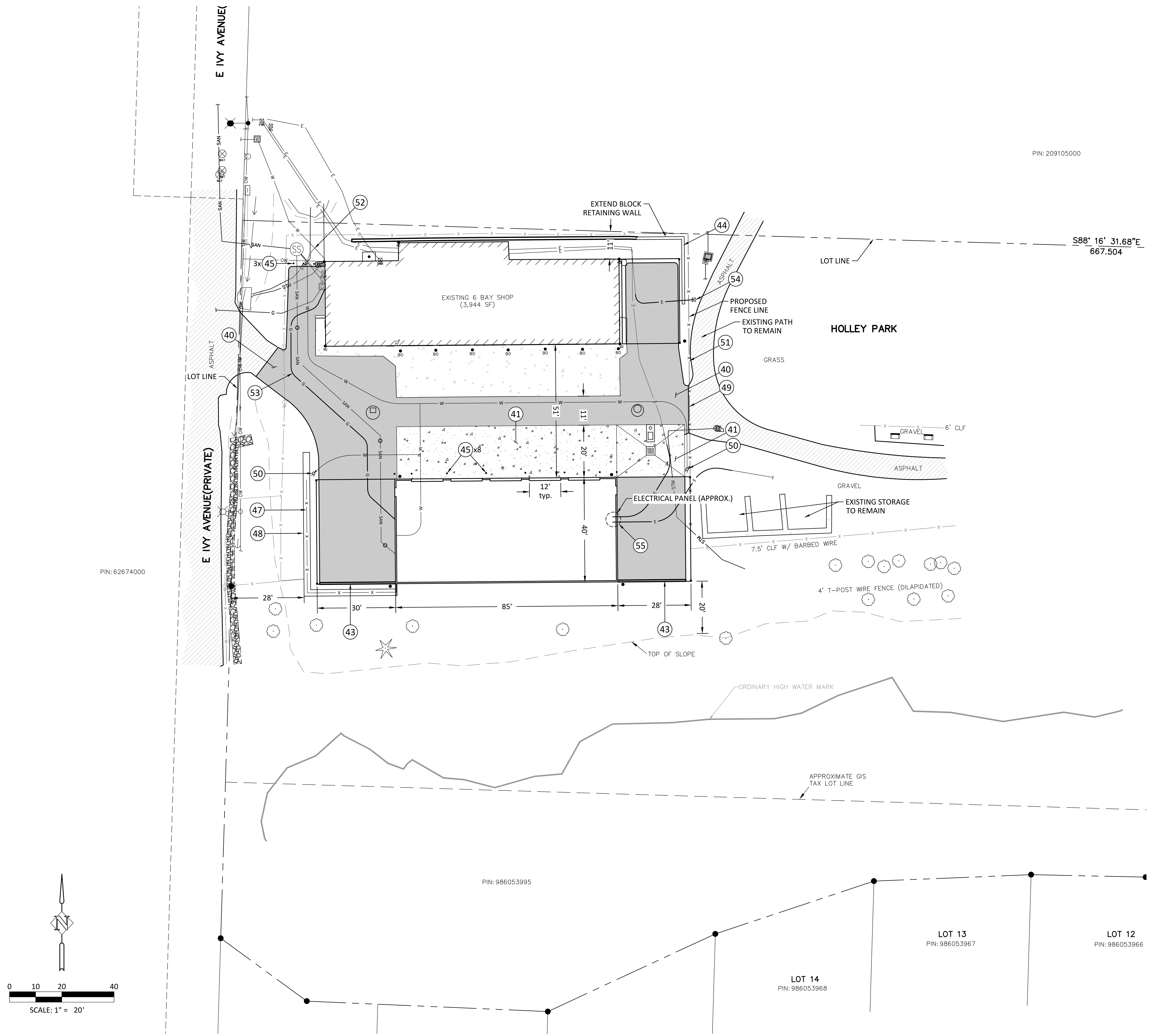

CONSTRUCTION NOTES:

(40) CONSTRUCT ASPHALT PAVEMENT SECTION PER DETAIL ON SHEET D1.0.

(41) CONSTRUCT CONCRETE PAVEMENT SECTION PER DETAIL ON SHEET D1.0. JOINT TYPE AND LOCATION SHALL BE APPROVED BY THE ENGINEER PRIOR TO CONSTRUCTION.

(43) CONSTRUCT STANDARD CURB PER DETAIL ON SHEET D1.0.

(44) CONSTRUCT LANDSCAPE BLOCK RETAINING WALL PER DETAIL ON SHEET D1.0. MATCH EXISTING BLOCKS.

(45) INSTALL 6 IN. DIAM. FIXED BOLLARD PER DETAIL ON SHEET D1.0.

(47) INSTALL 4 FT COATED CHAIN LINK FENCE. CORE DRILL AND GROUT 8 INCHES MINIMUM INTO TOP OF RETAINING WALL.

(48) SEE SHEET C1.2 FOR RETAINING WALL DETAILS.

(49) REINSTALL ROLLING FENCE GATE WITH NEW POSTS, FOUNDATIONS, AND HARDWARE AS REQUIRED. GATES SHALL BE EQUIPPED WITH KNOX KEY BOX IN AN ACCESSIBLE LOCATION IN ACCORDANCE WITH CCFR FIRE CODE STANDARD 5-2.

(50) REINSTALL HOSE HYDRANT. PROVIDE ALL NECESSARY PIPE AND FITTINGS.

(51) REINSTALL CHAIN LINK FENCE. PROVIDE NEW POSTS, FOUNDATIONS, HARDWARE, AND FENCING AS REQUIRED.

(52) TAP EXISTING WATER LINE AND EXTEND TO HOSE HYDRANTS AND BUILDING. MATCH EXISTING LINE DIAMETER.

(53) INSTALL NATURAL GAS SERVICE TO NEW BUILDING.

(54) RELOCATE ELECTRIC SERVICE PANEL BEYOND FENCE FOR PARK USE.

(55) INSTALL 200 AMP ELECTRICAL SERVICE. ACCOMMODATE FOR FUTURE GENERATOR CONNECTION.

NATURAL GAS AND ELECTRICAL LAYOUTS SHOWN ARE CONCEPTUAL. CONTRACTOR SHALL COORDINATE, DESIGN, PERMIT, FURNISH MATERIALS, AND PERFORM WORK AS NEEDED IN ACCORDANCE WITH ALL APPLICABLE REGULATIONS.

TOTAL SITE AREA= 62,800 SF
TOTAL IMPERVIOUS (EXISTING) = 22,600 SF (36%)
TOTAL IMPERVIOUS (PROPOSED) = 26,300 SF (42%)

NEW ROOF AREA = 6,600 SF
PROPOSED BUILDING HEIGHT = 24 FT
LANDSCAPING AREA = 0 SF
DEDICATED PARKING AREA = 3200 SF
DEDICATED PARKING STALLS = 6

LEGEND

- EXISTING CONTOUR
- PROPOSED MAJOR CONTOUR
- PROPOSED MINOR CONTOUR
- SANITARY LINE
- WATER LINE
- UNDERGROUND POWER
- FENCE LINE
- CATCH BASIN
- CATCH BASIN TYPE 2
- BOLLARD
- HOSE BIB / WATER SPIGOT
- EXISTING ASPHALT
- PROPOSED ASPHALT
- EXISTING CONCRETE
- PROPOSED CONCRETE

SITE PLAN
PUBLIC WORKS SITE IMPROVEMENTS
LA CENTER, WASHINGTON

HHPR
Harper Houf Peterson Righellis Inc.
ENGINEERS • PLANNERS
LANDSCAPE ARCHITECTS • SURVEYORS
1220 Main Street, Suite 150, Vancouver, WA 98660
phone: 360.750.1131 www.hhpr.com fax: 360.750.1141

STATE OF WASHINGTON REGISTERED PROFESSIONAL ENGINEER 21015676 10/3/2025

DESIGNED:	DJW
DRAWN:	DJW
CHECKED:	BMH
DATE:	10/3/2025

REVISIONS

DATE	NO.	DESCRIPTION

SHEET NO.
C1.0

JOB NO. CLC-07

P:\02-Vancouver\CLC (City of La Center)\CLC-07 (Public Works Operation Center)\CLC07-DWGS\Sheets\ C1.0 - SITE PLAN.dwg

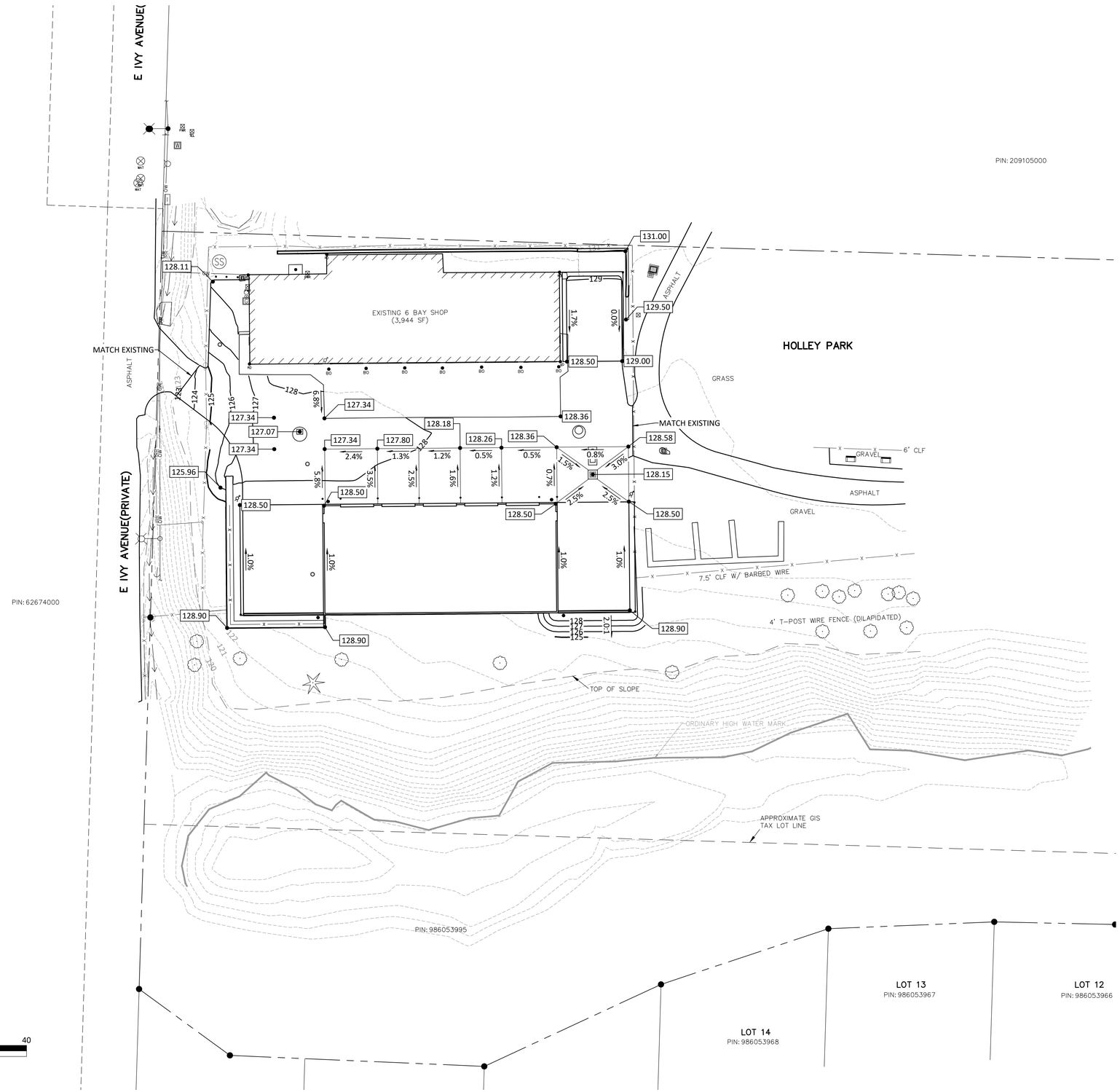

LEGEND

100	EXISTING CONTOUR
105	PROPOSED MAJOR CONTOUR
101	PROPOSED MINOR CONTOUR

DISTURBED AREA = 0.37 ACRES

VOLUMES FROM EXISTING TO FINISHED GRADE:
CUT = 21 CY
FILL = 605 CY

GRADING PLAN
PUBLIC WORKS SITE IMPROVEMENTS
LA CENTER, WASHINGTON

Harper Houf Peterson Righellis Inc.
ENGINEERS • PLANNERS
LANDSCAPE ARCHITECTS • SURVEYORS
1220 Main Street, Suite 150, Vancouver, WA 98660
phone: 360.750.1131 www.hhpr.com fax: 360.750.1141

STATE OF WASHINGTON
21015676
REGISTERED
PROFESSIONAL ENGINEER
10/3/2025

DESIGNED:	DJW
DRAWN:	DJW
CHECKED:	BMH
DATE:	10/3/2025

REVISIONS

DATE	NO.	DESCRIPTION

SHEET NO.
C1.1

JOB NO.
CLC-07

P:\02-Vancouver\CLC (City of La Center)\CLC-07 (Public Works Operation Center)\CL C07-DWGS\Sheets\ C1.1 - GRADING PLAN.dwg

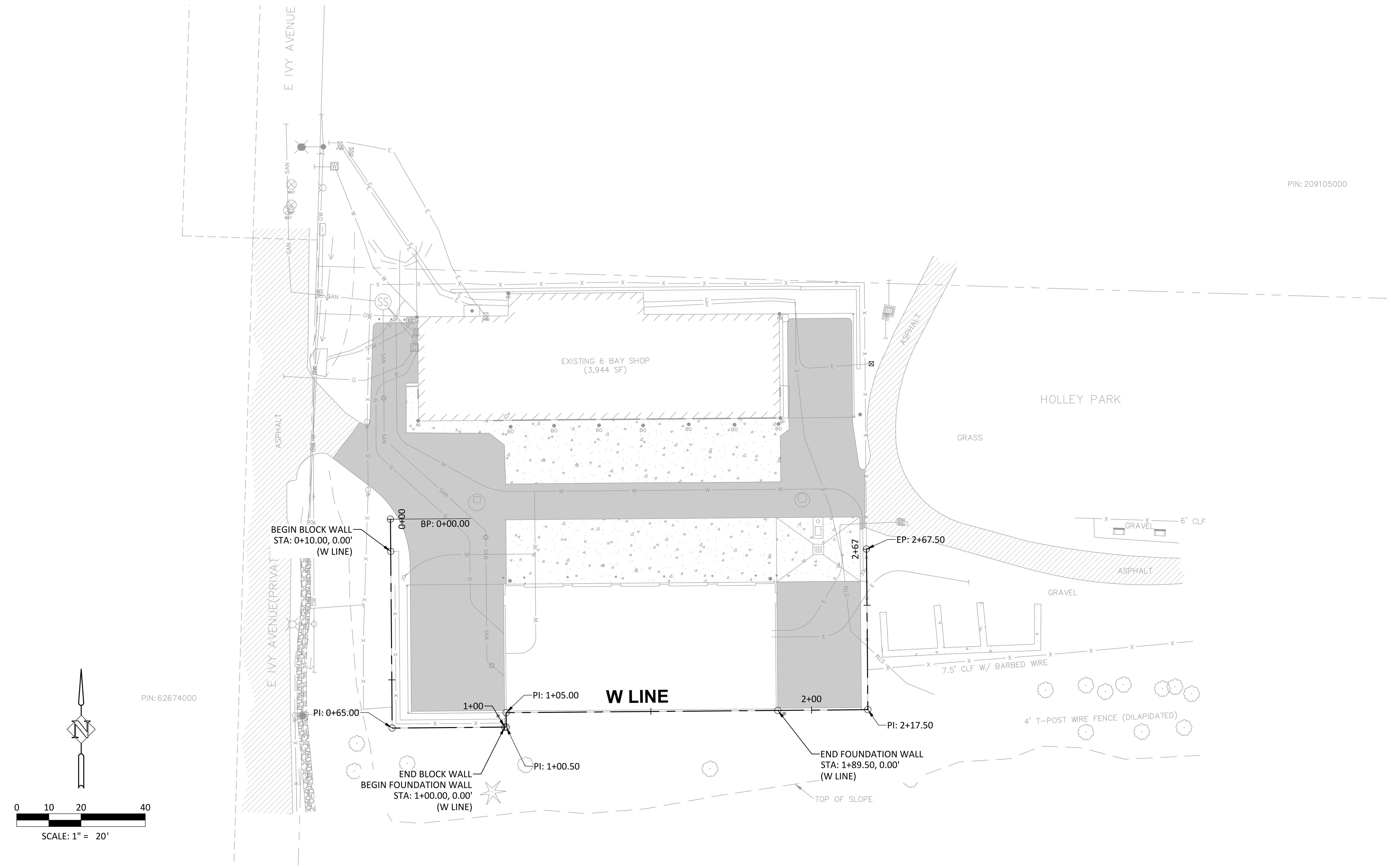

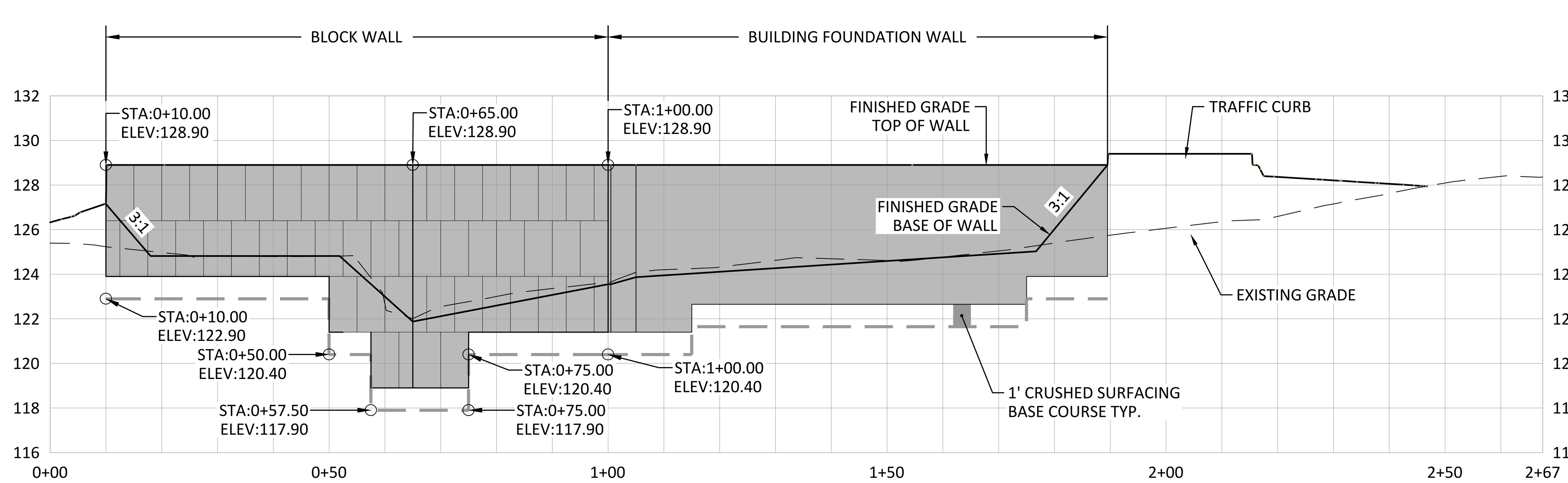

W LINE

SCALE: 1" = 20' (HORIZ.)
1" = 5' (VERT.)

NOTE:
BLOCK WALL FRONTAL AREA = 620 S.F.
UNITS SHOWN ARE 2.5' X 5.0'

AT W LINE STA. 1+00, THE BLOCK WALL ENDS AT A CONCRETE WALL EXTENDING FROM THE BUILDING FOUNDATION.

SEE STRUCTURAL SHEET S3.00 FOR ADDITIONAL INFORMATION.

RETAINING WALL PLAN AND PROFILE

PUBLIC WORKS SITE IMPROVEMENTS

LA CENTER, WASHINGTON

HHPR
Harper Houf Peterson Righellis Inc.
ENGINEERS • PLANNERS
LANDSCAPE ARCHITECTS • SURVEYORS
1220 Main Street, Suite 150, Vancouver, WA 98660
phone: 360.750.1131 www.hhpr.com fax: 360.750.1141

STATE OF WASHINGTON
21015676
REGISTERED
PROFESSIONAL ENGINEER
10/3/2025

DESIGNED:	DJW
DRAWN:	DJW
CHECKED:	BMH
DATE:	10/3/2025

REVISIONS

DATE	NO.	DESCRIPTION

SHEET NO.
C1.2

JOB NO.
CLC-07

P:\02-Vancouver\CLC (City of La Center)\CLC-07 (Public Works Operation Center)\CLC07-DWGS\Sheets\ C1.2 - RETAINING WALL PLAN AND PROFILE.dwg

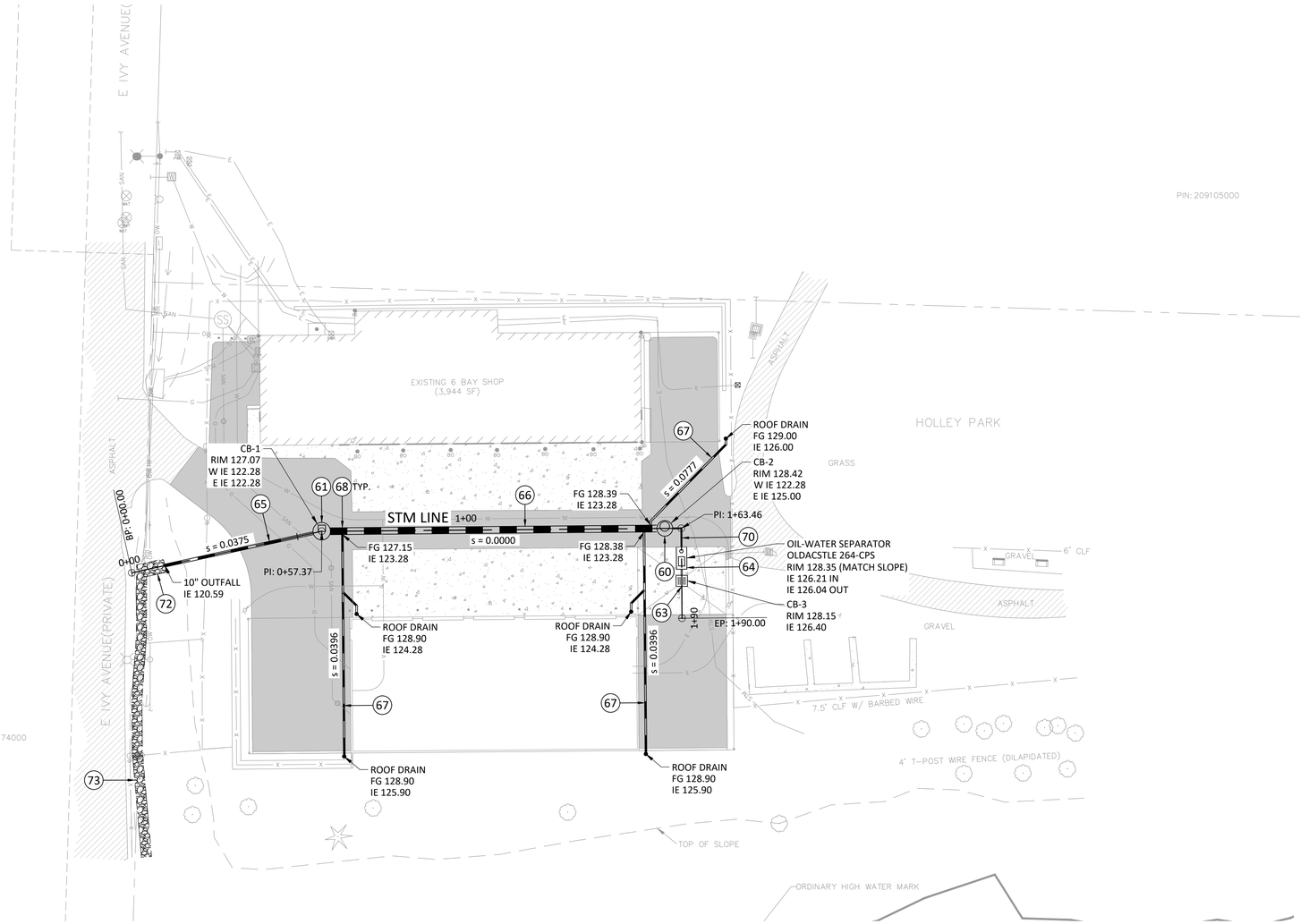

0 10 20 40

SCALE: 1" = 20'

CONSTRUCTION NOTES:

60 CONSTRUCT 48" TYPE 2 CATCH BASIN WITH SOLID CIRCULAR LID PER DETAIL, SHEET D1.1.

61 CONSTRUCT 54" TYPE 2 CATCH BASIN WITH FLOW RESTRICTOR AND RECTANCULAR DIRECTIONAL VANED INLET PER DETAILS, SHEET D1.1.

63 CONSTRUCT TYPE 1 CATCH BASIN PER DETAIL, SHEET D1.1.

64 INSTALL OIL/WATER SEPERATOR, OLDCASTLE TYPE 264-CPS WITH HEAVY TRAFFIC TOP 264-T-CPS-HD PER DETAIL, SHEET D1.2.

65 INSTALL 10 IN. DIAM. ADS N-12 DUAL WALL STORM SEWER PIPE.

66 INSTALL 24 IN. DIAM. ADS N-12 DUAL WALL STORM SEWER PIPE.

67 INSTALL 6 IN. DIAM. ASTM D3034 SDR 35 PVC DRAIN PIPE WITH GASKETED FITTINGS.

68 CONNCET TO 24 IN PIPE USING ADS INSERTA TEE.

70 INSTALL 4 IN. DIAM. ASTM D3034 SDR 35 PVC DRAIN PIPE WITH GASKETED FITTINGS.

72 CONSTRUCT RIPRAP OUTFALL PAD PER DETAIL, SHEET D1.2.

73 INSTALL RIPRAP ALONG EXISTING DITCH PER DETAIL, SHEET D1.2.

LEGEND

- STORM LINE
- AREA DRAIN
- CATCH BASIN TYPE 1
- DOWNSPOUT
- CATCH BASIN TYPE 2

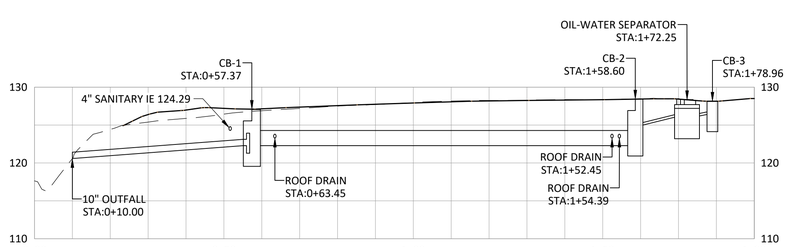

STM LINE

SCALE: 1" = 20' (HORIZ.)
1" = 10' (VERT.)

STORM DRAINAGE PLAN
PUBLIC WORKS SITE IMPROVEMENTS
LA CENTER, WASHINGTON

Harper Houf Peterson Righellis Inc.
ENGINEERS★PLANNERS
LANDSCAPE ARCHITECTS★SURVEYORS
1220 Main Street, Suite 150, Vancouver, WA 98660
phone: 360.750.1131 www.hhpr.com fax: 360.750.1141

STATE OF WASHINGTON
DALLAN J. WOODS
21015676
REGISTERED
PROFESSIONAL ENGINEER
10/3/2025

DESIGNED:	DRAWN:	CHECKED:	DATE:
DJW	DJW	BMH	10/3/2025

REVISIONS

DATE	NO.	DESCRIPTION

SHEET NO.
C1.3

JOB NO.
CLC-07

P:\02-Vancouver\CLC (City of La Center)\CLC-07 (Public Works Operation Center)\CLC07-DWGS\Sheets\ C1.3 - STORM DRAINAGE PLAN.dwg

CONSTRUCTION NOTES:

(78) UKNOWN UTILITY CROSSING DEPTH. POTHOLE PRIOR TO CONSTRUCTION. NOTIFY ENGINEER IF CONFLICTS EXIST.

(79) INSTALL 4 IN. DIAM. CLASS 52 DUCTILE IRON PIPE FOR SHALLOW COVER. SEE PROFILE, THIS SHEET.

(80) INSTALL 4 IN. DIAM. C900 DR18 PVC SANITARY SEWER PIPE WITH GASKETED FITTINGS.

(81) CONSTRUCT SANITARTY SEWER CLEANOUT PER DETAIL, SHEET D1.4.

(82) CUT AND FIELD FIT CONNECTION TO EXISTING 4" SANITARY SEWER LINE.

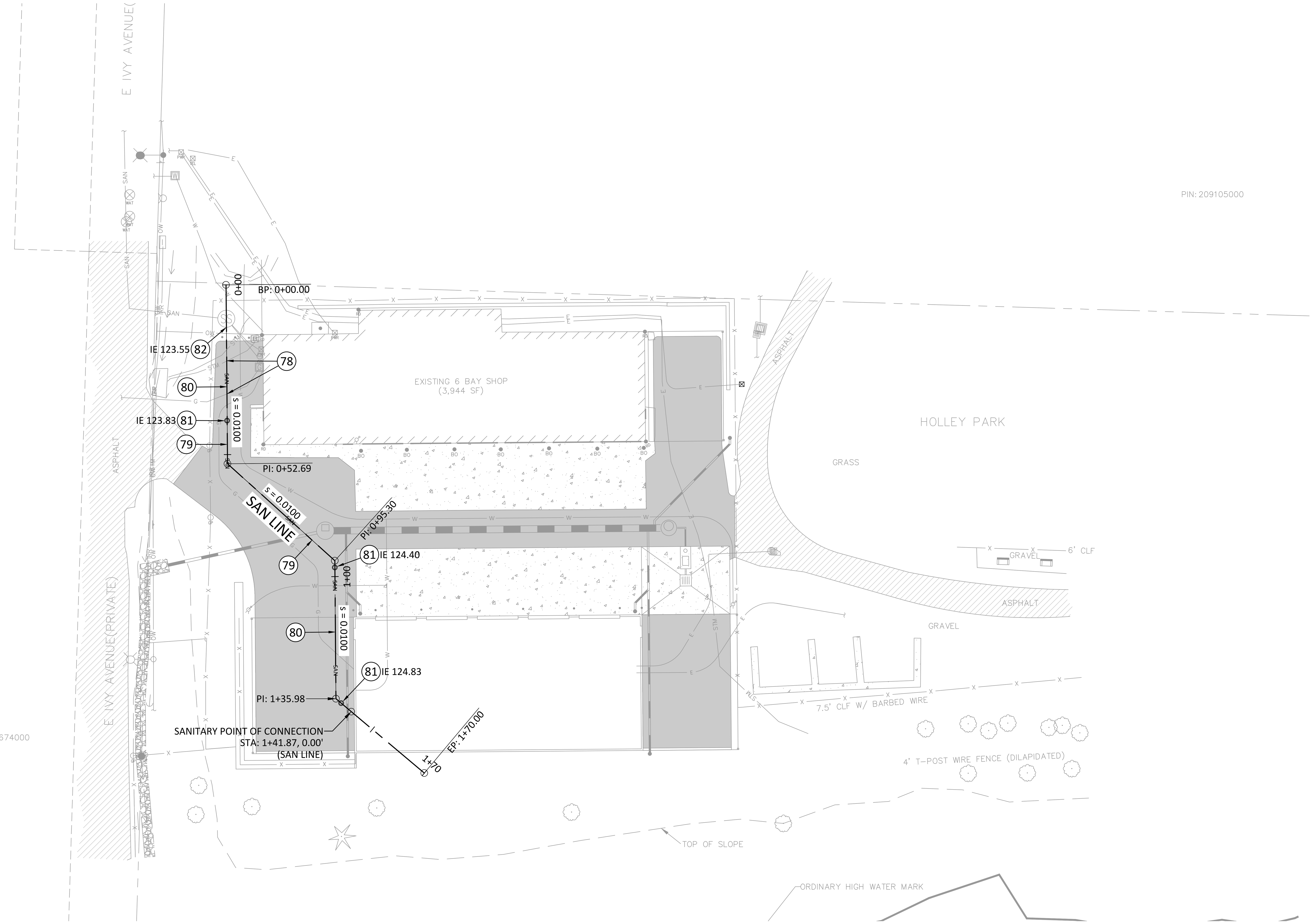

0 10 20 40

SCALE: 1" = 20'

LEGEND

SAN — SANITARY LINE

o SANITARY SEWER CLEANOUT

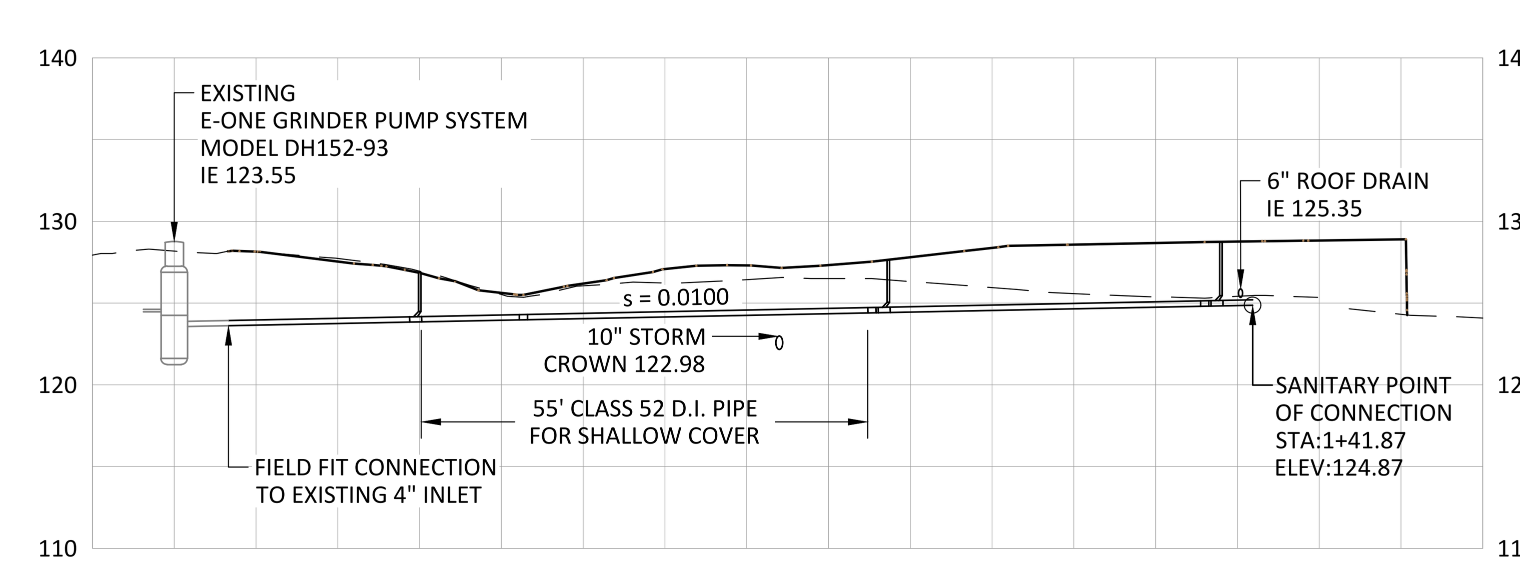

SAN LINE

SCALE: 1" = 20' (HORIZ.)
1" = 10' (VERT.)

SANITARY SEWER PLAN
PUBLIC WORKS SITE IMPROVEMENTS
LA CENTER, WASHINGTON

HHPR Harper Houf Peterson Righellis Inc.
ENGINEERS • PLANNERS
LANDSCAPE ARCHITECTS • SURVEYORS
1220 Main Street, Suite 150, Vancouver, WA 98660
phone: 360.750.1131 www.hhpr.com fax: 360.750.1141

STATE OF WASHINGTON — REGISTERED PROFESSIONAL ENGINEER 21015676 — 10/3/2025

DESIGNED:	DJW
DRAWN:	DJW
CHECKED:	BMH
DATE:	10/3/2025

REVISIONS

DATE	NO.	DESCRIPTION

SHEET NO.

C1.4

JOB NO. CLC-07

P:\02-Vancouver\CLC (City of La Center)\CLC-07 (Public Works Operation Center)\CLC07-DWGS\Sheets\ C1.4 - SANITARY SEWER PLAN.dwg

CONSTRUCTION NOTES:

(90) PREPARE WEED-FREE SURFACE. PLACE 3" TOPSOIL, 2" COMPOST BLANKET, FERTILIZER AND GRASS SEED.

(91) PLANT 2" CALIPER DECIDUOUS TREE FROM CITY OF LA CENTER NATIVE PLANT LIST, MUNICIPAL CODE 18.340.

(92) PLANT 6' - 8' CONIFER TREE FROM CITY OF LA CENTER NATIVE PLANT LIST, MUNICIPAL CODE 18.340.

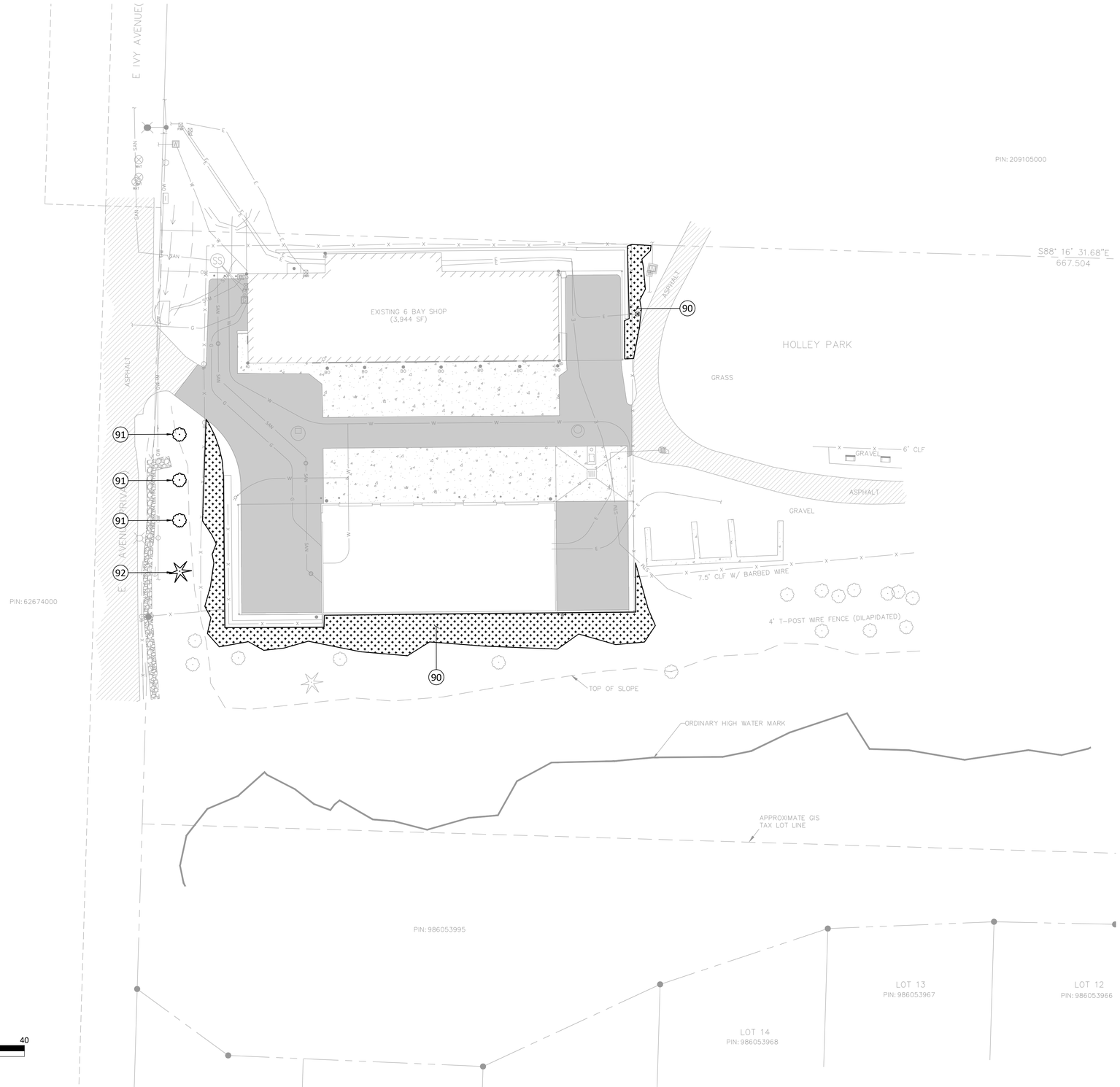

CONTRACTOR SHALL SUBMIT RESTORATION PLAN INCLUDING MATERIALS, APPLICATION RATES, AND SEQUENCE OF THE WORK FOR OWNER APPROVAL.

LEGEND

- SEEDING AREA
- DECIDUOUS TREE
- CONIFEROUS TREE

RESTORATION PLAN

PUBLIC WORKS SITE IMPROVEMENTS

LA CENTER, WASHINGTON

Harper Houf Peterson Righellis Inc.
ENGINEERS • PLANNERS
LANDSCAPE ARCHITECTS • SURVEYORS
1220 Main Street, Suite 150, Vancouver, WA 98660
phone: 360.750.1131 www.hhpr.com fax: 360.750.1141

DALLAN J. WEBB
STATE OF WASHINGTON
21015676
REGISTERED
PROFESSIONAL ENGINEER
10/3/2025

DESIGNED:	DJW
DRAWN:	DJW
CHECKED:	BMH
DATE:	10/3/2025

REVISIONS

DATE	NO.	DESCRIPTION

SHEET NO.

C1.5

JOB NO. CLC-07

P:\02-Vancouver\CLC (City of La Center)\CLC-07 (Public Works Operation Center)\CLC07-DWGS\Sheets\ C1.5 - RESTORATION PLAN.dwg

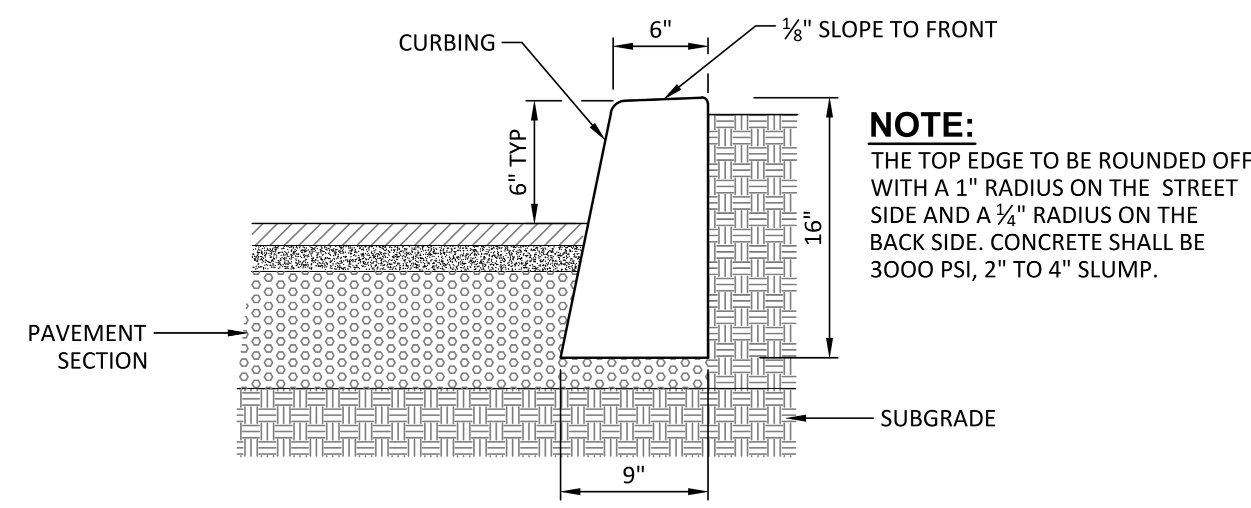

NOTE:
THE TOP EDGE TO BE ROUNDED OFF WITH A 1" RADIUS ON THE STREET SIDE AND A ¼" RADIUS ON THE BACK SIDE. CONCRETE SHALL BE 3OOO PSI, 2" TO 4" SLUMP.

STANDARD CURB
NTS

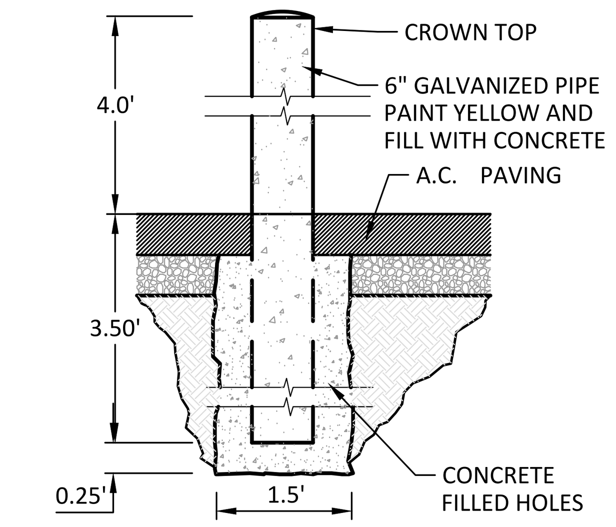

6" BOLLARD
NTS

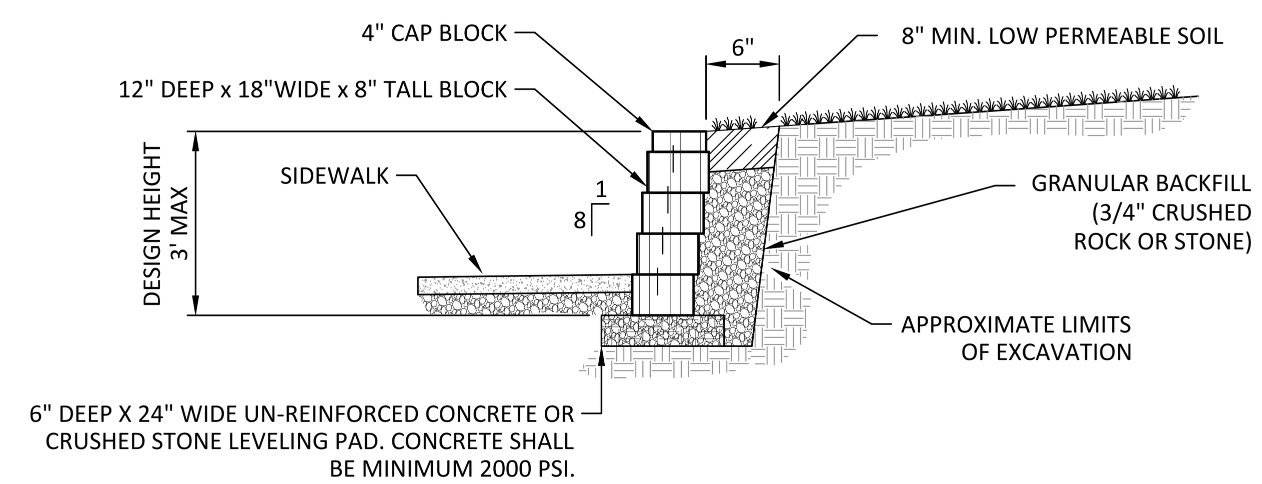

LANDSCAPE RETAINING WALL - PREFABRICATED MODULAR BLOCK
NTS

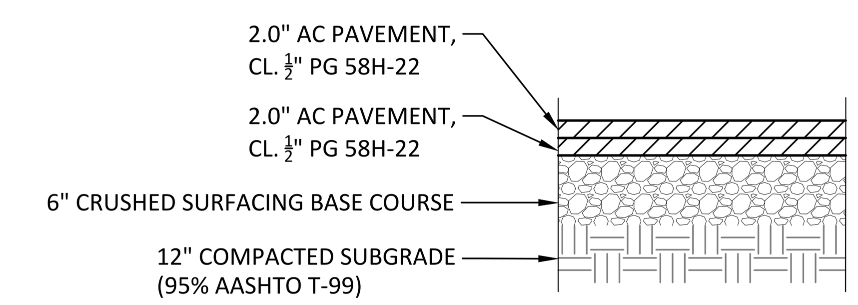

ASPHALT PAVEMENT SECTION
NTS

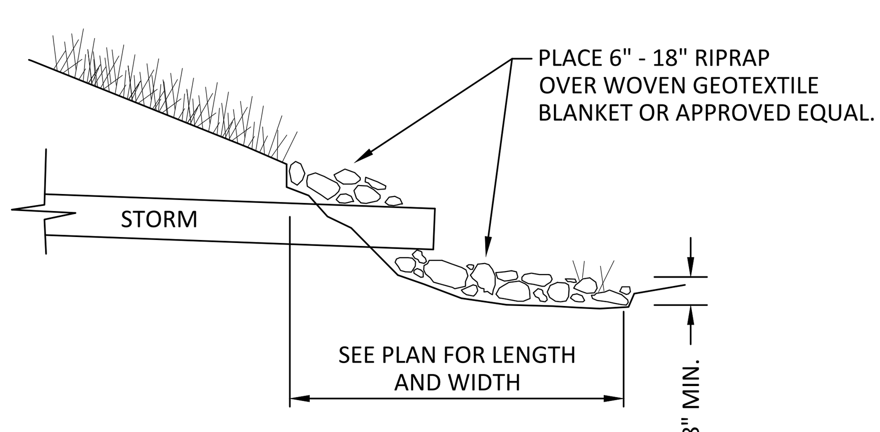

ROCK OUTFALL
NTS

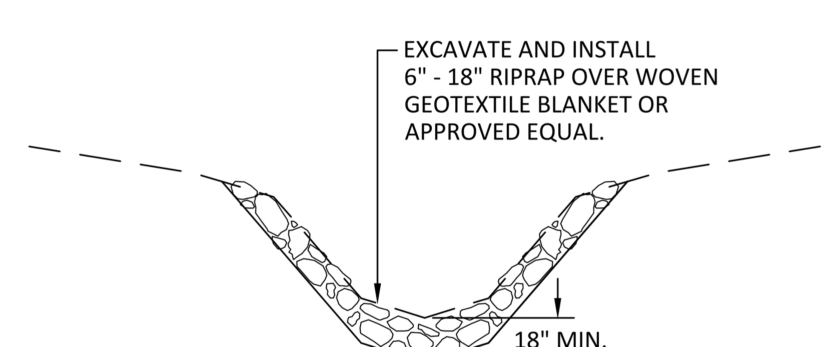

ROCK ARMORED DITCH
NTS

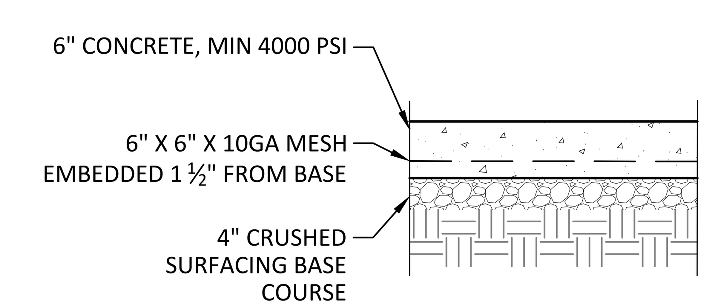

CONCRETE PAVEMENT SECTION
NTS

DETAILS
PUBLIC WORKS SITE IMPROVEMENTS
LA CENTER, WASHINGTON

HHPR Harper Houf Peterson Righellis Inc.
ENGINEERS • PLANNERS
LANDSCAPE ARCHITECTS • SURVEYORS
1220 Main Street, Suite 150, Vancouver, WA 98660
phone: 360.750.1131 www.hhpr.com fax: 360.750.1141

STATE OF WASHINGTON 21015676 REGISTERED PROFESSIONAL ENGINEER
10/3/2025

DESIGNED:	DJW
DRAWN:	DJW
CHECKED:	BMH
DATE:	10/3/2025

REVISIONS

DATE	NO.	DESCRIPTION

SHEET NO.
D1.0

JOB NO. CLC-07

P:\02-Vancouver\CLC (City of La Center)\CLC-07 (Public Works Operation Center)\CLC07-DWGS\Sheets\ D1.0 - DETAILS.dwg

DRAWN BY: FERN LIDDELL

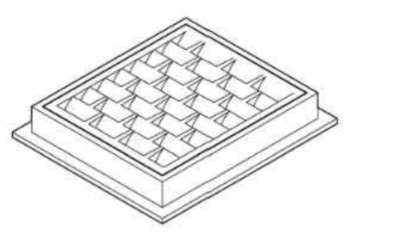

FRAME AND VANED GRATE

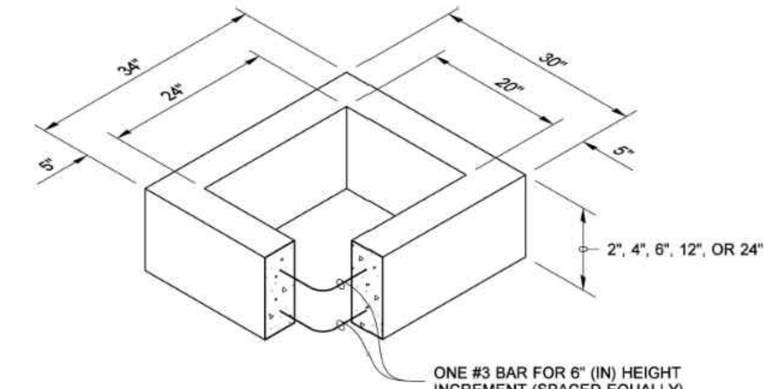

RECTANGULAR ADJUSTMENT SECTION

PIPE ALLOWANCES	
PIPE MATERIAL	MAXIMUM INSIDE DIAMETER (INCHES)
REINFORCED OR PLAIN CONCRETE	12"
ALL METAL PIPE	15"
CPSSP ★ (STD. SPEC. SECT. 9-05.20)	12"
SOLID WALL PVC (STD. SPEC. SECT. 9-05.12(1))	15"
PROFILE WALL PVC (STD. SPEC. SECT. 9-05.12(2))	15"

★ CORRUGATED POLYETHYLENE STORM SEWER PIPE

NOTES

1. As acceptable alternatives to the rebar shown in the **PRECAST BASE SECTION**, fibers (placed according to the Standard Specifications), or wire mesh having a minimum area of 0.12 square inches per foot shall be used with the minimum required rebar shown in the **ALTERNATIVE PRECAST BASE SECTION**. Wire mesh shall not be placed in the knockouts.
2. The knockout diameter shall not be greater than 20" (in). Knockouts shall have a wall thickness of 2" (in) minimum to 2.5" (in) maximum. Provide a 1.5" (in) minimum gap between the knockout wall and the outside of the pipe. After the pipe is installed, fill the gap with joint mortar in accordance with **Standard Specification Section 9-04.3**.
3. The maximum depth from the finished grade to the lowest pipe invert shall be 5' (ft).
4. The frame and grate may be installed with the flange down, or integrally cast into the adjustment section with flange up.
5. The Precast Base Section may have a rounded floor, and the walls may be sloped at a rate of 1 : 24 or steeper.
6. The opening shall be measured at the top of the **Precast Base Section**.
7. All pickup holes shall be grouted full after the basin has been placed.

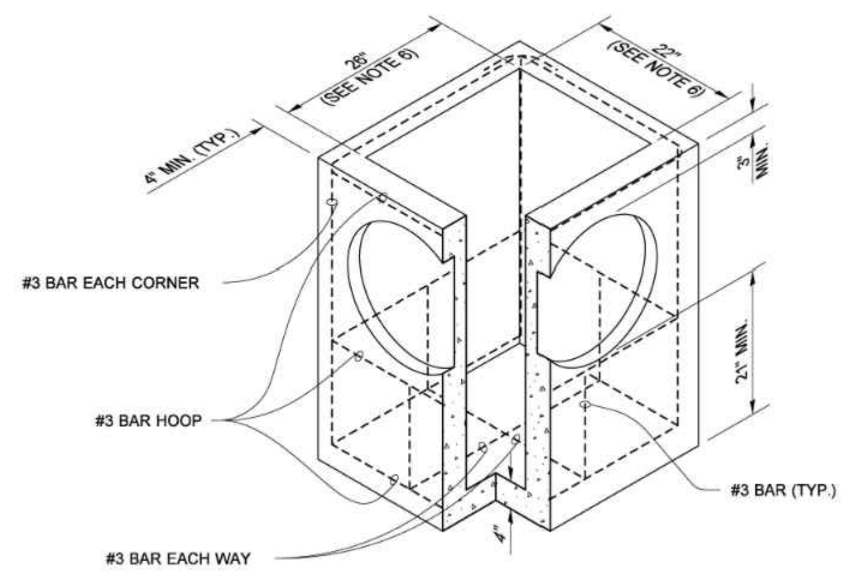

PRECAST BASE SECTION

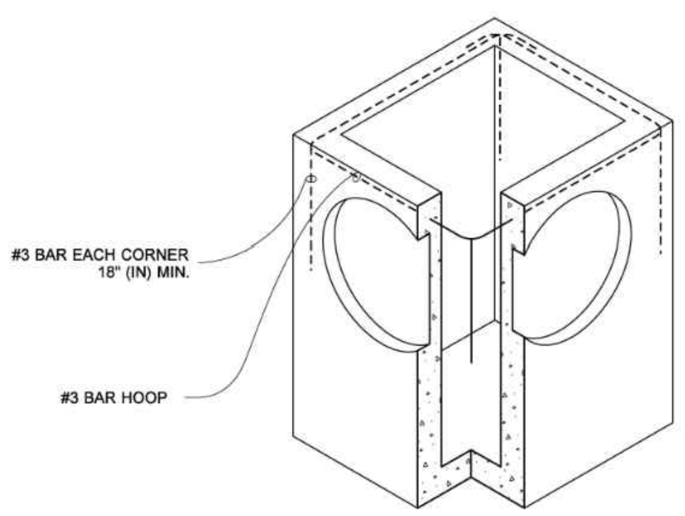

(SEE NOTE 1)

ALTERNATIVE PRECAST BASE SECTION

CATCH BASIN TYPE 1

STANDARD PLAN B-5.20-03

SHEET 1 OF 1 SHEET

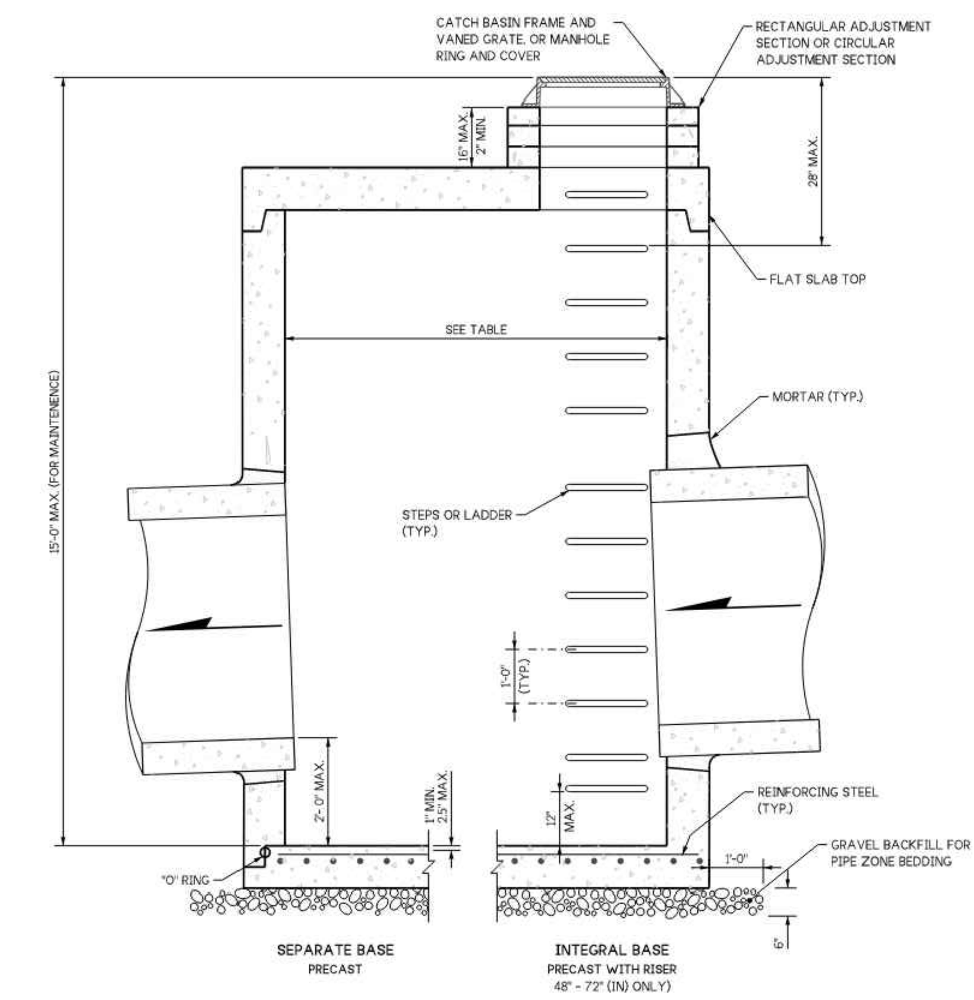

NOTES:

1. No steps are required when height is 4' or less.
2. The bottom of the precast catch basin may be sloped to facilitate cleaning.
3. The rectangular frame and grate may be installed with the flange up or down. The frame may be cast into the adjustment section.
4. Knockouts shall have a wall thickness of 2" (in) minimum to 2.5" (in) maximum. Provide a 1.5" (in) minimum gap between the knockout wall and the outside of the pipe. After the pipe is installed, fill the gap with joint mortar in accordance with **Standard Specification Section 9-04.3.**
5. Pipe allowances will vary depending on the pipe material used. Contact the Region Hydraulics Engineer for assistance.

CATCH BASIN DIMENSIONS				
CATCH BASIN DIAMETER	MIN. WALL THICKNESS	MIN. BASE THICKNESS	MAXIMUM KNOCKOUT SIZE	MINIMUM DISTANCE BETWEEN KNOCKOUTS
48"	4"	6"	36"	8"
54"	4.5"	8"	42"	8"
60"	5"	8"	48"	8"
72"	6"	8"	60"	12"
84"	8"	12"	72"	12"
96"	8"	12"	84"	12"
120"	10"	12"	96"	12"
144"	12"	12"	108"	12"

PIPE ALLOWANCES					
CATCH BASIN DIAMETER	PIPE MATERIAL WITH MAXIMUM INSIDE DIAMETER				
	CONCRETE	ALL METAL	CPSSP ① PP ④	SOLID WALL PVC ②	PROFILE WALL PVC ③
48"	24"	30"	24"	30"	30"
54"	30"	36"	30"	36"	36"
60"	36"	42"	36"	42"	42"
72"	42"	54"	42"	48"	48"
84"	54"	60"	54"	48"	48"
96"	60"	72"	60"	48"	48"
120"	66"	84"	60"	48"	48"
144"	78"	96"	60"	48"	48"

① Corrugated Polyethylene Storm Sewer Pipe (See Standard Specification Section 9-05.20)
② (See Standard Specification Section 9-05.12(1))
③ (See Standard Specification Section 9-05.12)2))
④ Polypropolyne Pipe (See Standard Specification Section 9-05.24)

CATCH BASIN TYPE 2

STANDARD PLAN B-10.20-03

SHEET 1 OF 1 SHEET

DRAWN BY: FERN LIDDELL

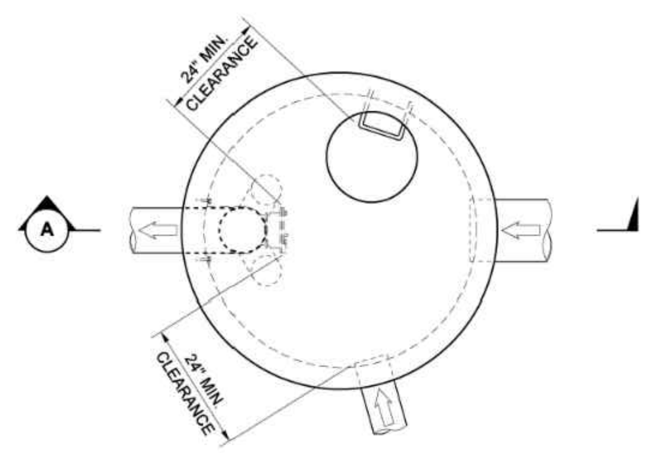

PLAN VIEW

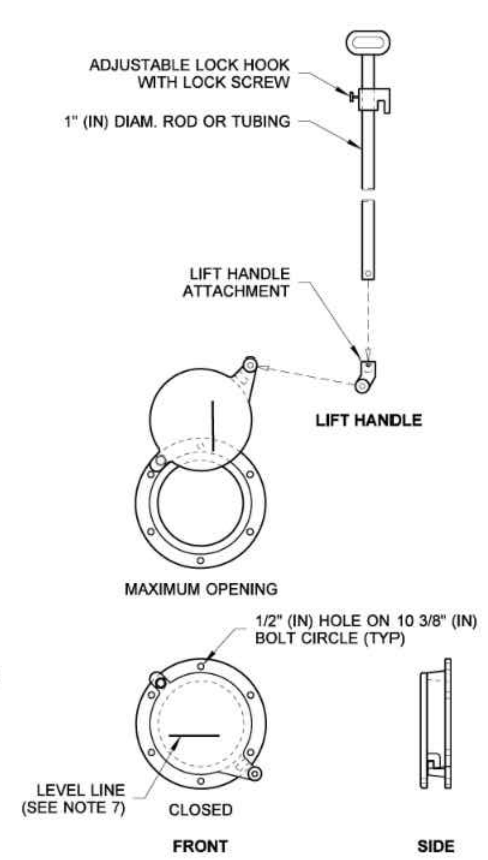

SHEAR GATE DETAILS

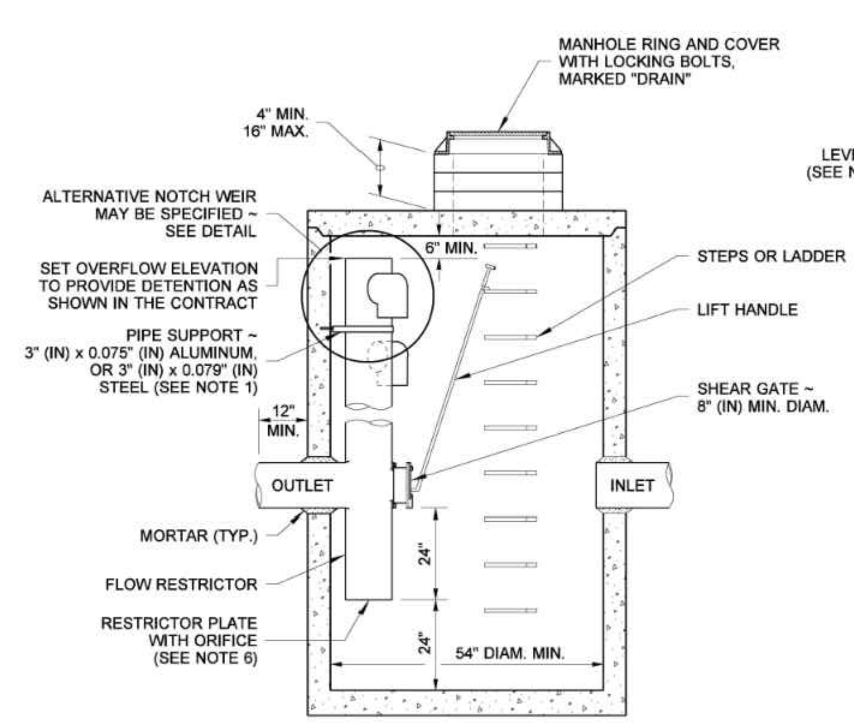

SECTION (A)

NOTES

1. The pipe supports and the flow restrictor shall be constructed of the same material and be anchored at a maximum spacing of 36" (in). Attach the pipe supports to the manhole with 5/8" (in) stainless steel expansion bolts or embed the supports into the manhole wall 2" (in).
2. The vertical riser stem of the flow restrictor shall be the same diameter as the horizontal outlet pipe with a minimum diameter of 12" (in).
3. The flow restrictor shall be fabricated from one of the following materials:
   0.060" (in) Corrugated Aluminum Alloy Drain Pipe
   0.064" (in) Corrugated Galvanized Steel Drain Pipe with Treatment 1
   0.064" (in) Corrugated Aluminized Steel Drain Pipe
   0.060" (in) Aluminum alloy flat sheet, in accordance with **ASTM B 209, 5052 H32 or EPS**
   High Density Polyethylene Storm Sewer Pipe
4. The frame and ladder or steps are to be offset so that: the shear gate is visible from the top; the climb-down space is clear of the riser and gate; the frame is clear of the curb.
5. The multi-orifice elbows may be located as shown, or all placed on one side of the riser to assure ladder clearance. The size of the elbows and their placement shall be specified in the Contract.
6. Restrictor plate with orifice as specified in the Contract. The opening is to be cut round and smooth.
7. The shear gate shall be made of aluminum alloy in accordance with **ASTM B 26 and ASTM B 275**, designation **ZG32A**; or cast iron in accordance with **ASTM A 48, Class 30B**.
   The lift handle shall be made of a similar metal to the gate (to prevent galvanic corrosion), it may be of solid rod or hollow tubing, with adjustable hook as required.
   A neoprene rubber gasket is required between the riser mounting flange and the gate flange.
   Install the gate so that the level-line mark is level when the gate is closed.
   The mating surfaces of the lid and the body shall be machined for proper fit.
   All shear gate bolts shall be stainless steel.
8. The shear gate maximum opening shall be controlled by limited hinge movement, a stop tab, or some other device.
9. Alternative shear gate designs are acceptable if material specifications are met.

SEE SHEET D1.2 FOR FLOW RESTRICTOR DETAIL

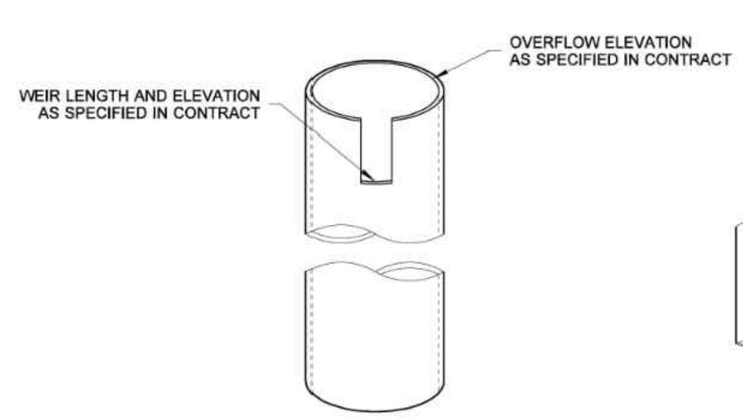

NOTCH WEIR DETAIL

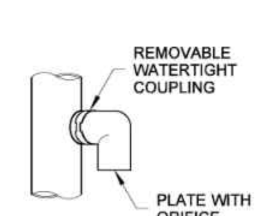

ELBOW DETAIL

CATCH BASIN TYPE 2 WITH FLOW RESTRICTOR

STANDARD PLAN B-10.40-02

SHEET 1 OF 1 SHEET

DRAWN BY: FERN LIDDELL

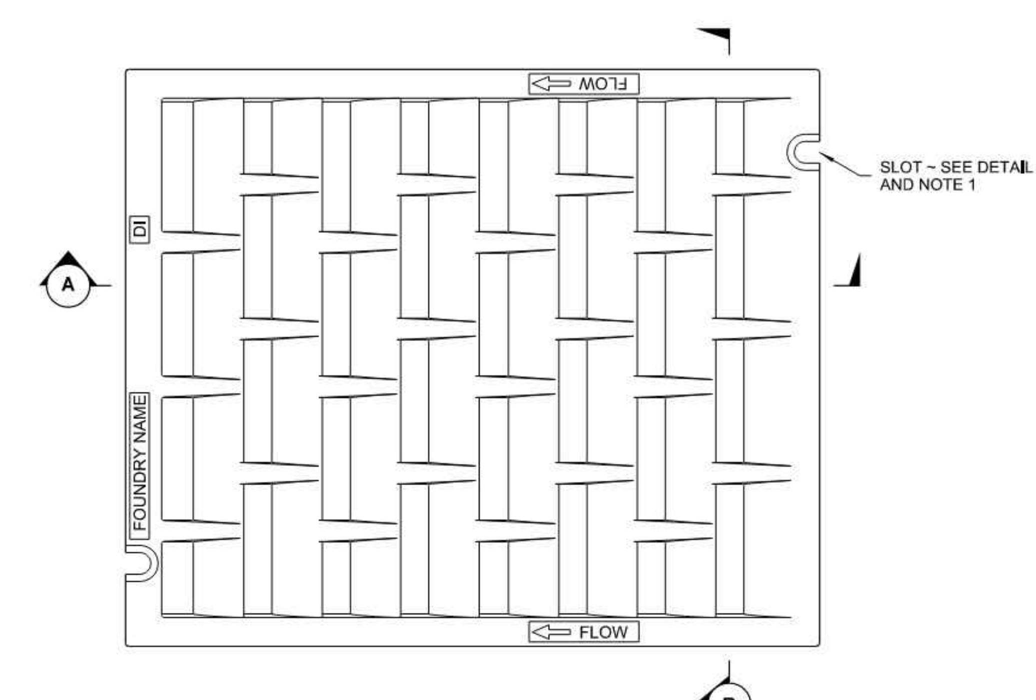

TOP

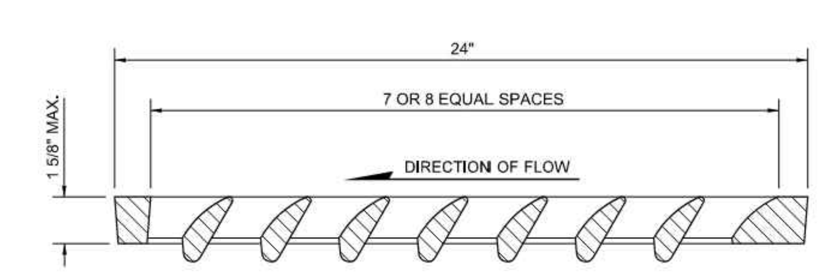

SECTION (A)

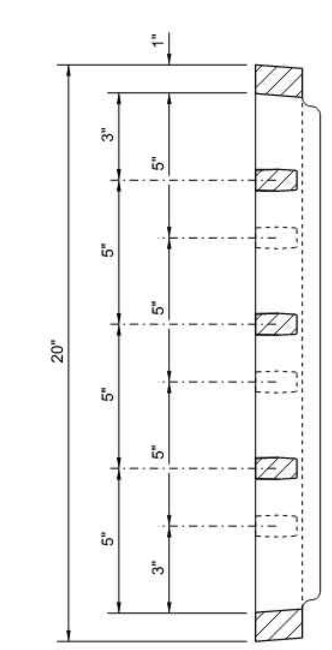

SECTION (B)

NOTES

1. Bolt-down capability is required on all frames, grates, and covers, unless specified otherwise in the Contract. Provide 2 holes in the frame that are vertically aligned with the grate or cover slots. The frame shall accept the 304 Stainless Steel (S.S.) 5/8" (in) - 11 NC × 2" (in) allen head cap screw by being tapped, or other approved mechanism. Location of bolt-down holes varies by manufacturer.
2. Refer to **Standard Specification Section 9-05.15** and **9-05.15(2)** for additional requirements.
3. For frame details, see **Standard Plan B-30.10.**

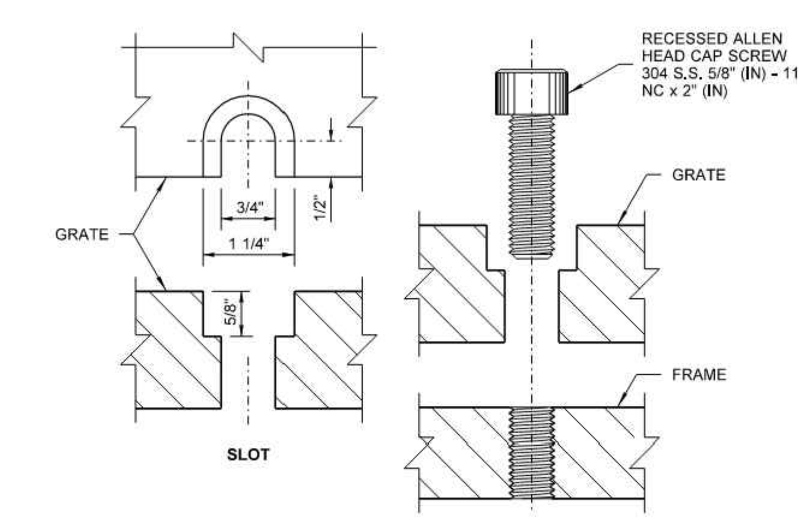

BOLT-DOWN DETAILS
SEE NOTE 1

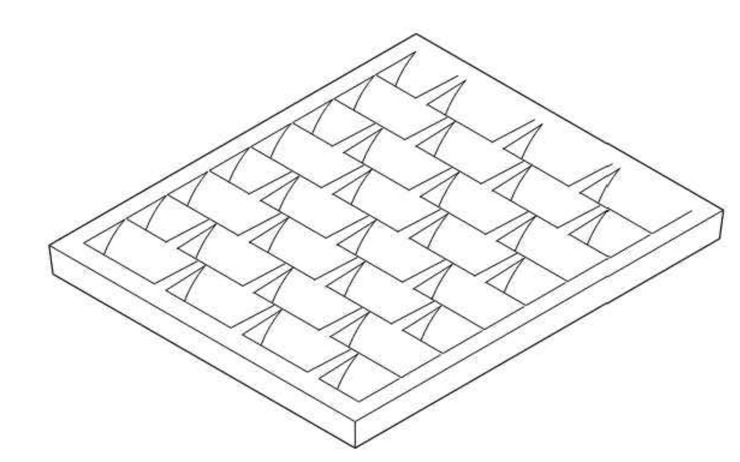

ISOMETRIC

RECTANGULAR VANED GRATE

STANDARD PLAN B-30.30-03

SHEET 1 OF 1 SHEET

DETAILS

PUBLIC WORKS SITE IMPROVEMENTS

LA CENTER, WASHINGTON

Harper Houf Peterson Righellis Inc.
ENGINEERS ◆ PLANNERS
LANDSCAPE ARCHITECTS ◆ SURVEYORS
1220 Main Street, Suite 150, Vancouver, WA 98660
phone: 360.750.1131 www.hhpr.com fax: 360.750.1141

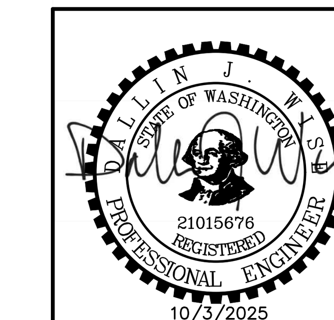

DESIGNED:	DJW
DRAWN:	DJW
CHECKED:	BMH
DATE:	10/3/2025

REVISIONS

DATE	NO.	DESCRIPTION

SHEET NO.

D1.1

JOB NO. CLC-07

P:\02-Vancouver\CLC (City of La Center)\CLC-07 (Public Works Operation Center)\CLC07-DWGS\Sheets\ D1.1 - DETAILS.dwg

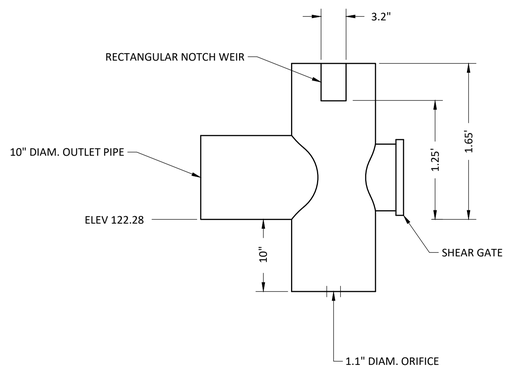

INSTALL SHEAR GATE AND AND ATTACH TO CONCRETE STRUCTURE PER STANDARD DETAIL B-10.40, SHEET D1.1

FLOW RESTRICTOR

NTS

264-CPS

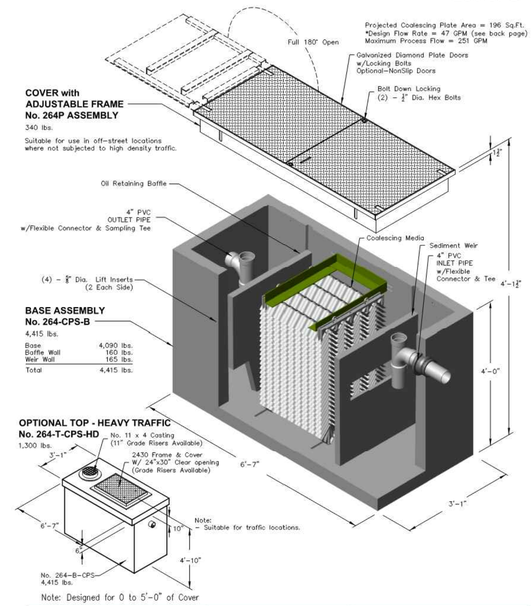

Oldcastle Precast®	264-CPS	264-CPS OIL / WATER SEPARATOR COALESCING - 47 GPM
PO Box 323, Wilsonville, Oregon 97070-0323	File Name: 020-264CPS	
Tel: (503) 682-2844 Fax: (503) 682-2657	Issue Date: 2018	
	oldcastleprecast.com/wilsonville	

5.0

264-CPS

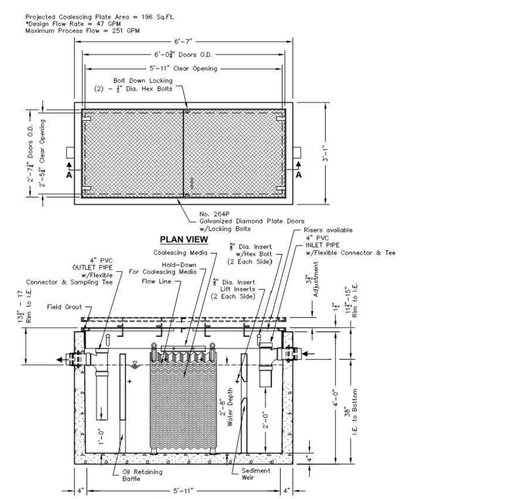

*DESIGN FLOW RATE	EFFLUENT QUALITY	100% COLLECTED SIZE
47	10 ppm	60 Micron

Notes:
- Static Water Depth = 2'-8"
- Prior to "Startup" of system, fill with clean water to bottom of outlet pipe. For best results, fill to flow line.
- Follow Regular Inspection, Cleaning, & Maintenance Schedule (See Clean Out & Maintenance).

Basic Design Information: *
Influent Characterics
- Oil Specific Gravity = 0.88
- Operating Temperature = 50°
- Influent Oil Concentration = 100 ppm
- Mean Oil Droplet Size = 130 Microns
- .033 ft/min. Critical Oil Droplet Predicted Rise Rate

*Basic Design Information per Washington State Department of Ecology; User to Adjust Estimates for Variations in Real Conditions.

Oldcastle Precast®	264-CPS	264-CPS OIL / WATER SEPARATOR COALESCING - 47 GPM
PO Box 323, Wilsonville, Oregon 97070-0323	File Name: 020-264CPS	
Tel: (503) 682-2844 Fax: (503) 682-2657	Issue Date: 2018	
	oldcastleprecast.com/wilsonville	

5.1

DETAILS

PUBLIC WORKS SITE IMPROVEMENTS

LA CENTER, WASHINGTON

Harper Houf Peterson Righellis Inc.
ENGINEERS • PLANNERS
LANDSCAPE ARCHITECTS • SURVEYORS
1220 Main Street, Suite 150, Vancouver, WA 98660
phone: 360.750.1131 www.hhpr.com fax: 360.750.1141

STATE OF WASHINGTON
BRIAN J. WILSON
21015676
REGISTERED PROFESSIONAL ENGINEER
10/3/2025

DESIGNED:	DJW
DRAWN:	DJW
CHECKED:	BMH
DATE:	10/3/2025

REVISIONS

DATE	NO.	DESCRIPTION

SHEET NO. **D1.2**

JOB NO. CLC-07

P:\02-Vancouver\CLC (City of La Center)\CLC-07 (Public Works Operation Center)\CLC07-DWGS\Sheets\ D1.2 - DETAILS.dwg

1. ALL EROSION AND SEDIMENT CONTROL MEASURES SHALL BE IN PLACE AND IN WORKING CONDITION PRIOR TO ANY LAND DISTURBING ACTIVITY CAUSED BY CLEARING OR GRADING. EROSION AND SEDIMENT CONTROL MEASURES SHALL BE APPROVED BY THE CITY PRIOR TO THE COMMENCEMENT OF WORK. THE CONTRACTOR SHALL CALL FOR AN ON–SITE INSPECTION WHEN EROSION AND SEDIMENT CONTROL MEASURES ARE IN PLACE AND PRIOR TO COMMENCEMENT OF WORK.

2. THE EROSION AND SEDIMENT CONTROL MEASURES SHALL BE SITED, DESIGNED AND CONSTRUCTED IN ACCORDANCE WITH THE REQUIREMENTS IN THE CITY OF LA CENTER ENGINEERING STANDARDS FOR PUBLIC WORKS CONSTRUCTION.

3. THE DEVELOPER IS RESPONSIBLE FOR MAINTAINING EROSION PREVENTION AND SEDIMENT CONTROL MEASURES DURING AND AFTER INSTALLATION OF ALL UTILITY WORK ASSOCIATED WITH UTILITY TRENCHES.

4. PRIOR TO ANY SITE EXCAVATION, ALL STORM DRAINAGE INLETS SHALL BE PROTECTED DOWN SLOPE FROM ANY DISTURBED OR CONSTRUCTION AREAS PER THE STANDARD DETAILS TO PREVENT SEDIMENT FROM ENTERING THE STORM DRAINAGE SYSTEM PRIOR TO PERMANENT STABILIZATION OF THE DISTURBED AREAS. CLEAN THE FILTER FABRIC AS NECESSARY TO MAINTAIN DRAINAGE. REMOVE FILTER AND CLEAN CATCH BASINS FOLLOWING COMPLETION OF SITEWORK.

5. THE CONTRACTOR SHALL NOT ALLOW SEDIMENT OR DEBRIS TO ENTER NEW OR EXISTING PIPES, CATCH BASINS OR INFILTRATION SYSTEMS.

6. NEWLY CONSTRUCTED OR MODIFIED INLETS AND CATCH BASINS ARE TO BE PROTECTED IMMEDIATELY UPON INSTALLATION.

7. TEMPORARY SEEDING AND MULCHING OF FILL SLOPES AND DIVERSION DIKES SHALL BE COMPLETED WITHIN ONE WEEK AFTER ROUGH GRADING.

8. ALL EXPOSED AND UNWORKED SOILS SHALL BE STABILIZED BY THE APPROPRIATE BEST MANAGEMENT PRACTICES (BMPs). DURING THE PERIOD FROM OCTOBER 1 TO APRIL 30 NO SOIL SHALL BE EXPOSED FOR MORE THAN TWO (2) DAYS. FROM MAY 1 TO SEPTEMBER 30 NO SOIL SHALL BE EXPOSED FOR MORE THAN SEVEN (7) DAYS.

9. MATERIAL STOCKPILES ARE TO BE PROTECTED BY THE FOLLOWING MEANS:
–TEMPORARY: COVER PILES WITH TARPS OR PLASTIC SHEETING WEIGHTED WITH CONCRETE BLOCKS, LUMBER OR TIRES.
–PERMANENT: COVER PILES WITH TARPS OR PLASTIC, OR RESEED. PERIMETER AREAS AROUND PILES ARE TO BE SURROUNDED WITH EROSION CONTROL FILTER FABRIC FENCES UNTIL SOIL SURFACE IS STABILIZED WITH RESEEDING.

10. THE CONTRACTOR SHALL MAINTAIN ON SITE A WRITTEN DAILY LOG OF EROSION CONTROL BMP MAINTENANCE.

11. IF THE CITY INSPECTOR OR ENGINEER HAS EVIDENCE OF POOR CONSTRUCTION PRACTICES OR IMPROPER EROSION PREVENTION BMPs, CITATIONS AND/OR A STOP WORK ORDER SHALL BE ISSUED UNTIL PROPER MEASURES HAVE BEEN TAKEN AND APPROVED BY THE CITY OF LA CENTER. IF THE BMPs APPLIED TO A SITE ARE INSUFFICIENT TO PREVENT SEDIMENT FROM REACHING WATER BODIES, ADJACENT PROPERTIES, OR PUBLIC RIGHT–OF–WAY, THEN THE CITY SHALL REQUIRE ADDITIONAL BMPs.

12. ALTERNATIVE BMP'S NOT SHOWN IN THESE DETAILS ARE ACCEPTABLE PROVIDED THEY ARE PART OF ECOLOGY'S WESTERN WASHINGTON STORMWATER MANAGEMENT MANUAL AND THE CITY ENGINEER REVIEWS AND APPROVES THE ALTERNATIVE BMP'S AS PART OF THE EROSION CONTROL PLAN PRIOR TO THE START OF CONSTRUCTION.

EROSION CONTROL GENERAL NOTES I

PLAN #

CITY OF LA CENTER APPROVED

Bart Stepp, PE 7/23/09

CITY ENGINEER DATE

REVISIONS:	DATE:	DRAWN:	DESIGNED:

ER-1A

13. PROVIDE A 12–INCH DEEP PAD OF CRUSHED ROCK FOR A DISTANCE OF 100 FEET INTO THE SITE FOR ALL ACCESS POINTS UTILIZED BY CONSTRUCTION EQUIPMENT AND TRUCKS. WIDTH OF THE PAD SHALL BE A MINIMUM OF 20 FEET. ALL TRUCKS LEAVING THE SITE SHALL EGRESS ACROSS THE PAD. ACCUMULATED SOIL SHALL BE PERIODICALLY REMOVED, OR ADDITIONAL ROCK SHALL BE PLACED UPON THE PAD SURFACE. ROCK SHALL BE CLEAN 4 INCH TO 8 INCH QUARRY SPALLS. ALL MATERIALS SPILLED, DROPPED, WASHED OR TRACKED FROM VEHICLES ONTO ROADWAYS OR INTO STORM DRAINS MUST BE REMOVED IMMEDIATELY.

14. PAVEMENT SWEEPING AND SHOVELING IS REQUIRED. WASHING THE PAVEMENT INTO THE STORM SYSTEM IS NOT PERMITTED.

15. AT SITES WITH LESS THAN 1 ACRE OF EXPOSED SOIL, PAD LENGTH MAY BE REDUCED TO 50 FEET. SINGLE FAMILY LOT ENTRANCES MAY HAVE THE PAD LENGTH REDUCED TO 20 FEET.

16. INSTALL SEDIMENT FENCE IN ACCORDANCE WITH DETAIL ER–3 PRIOR TO BUILDING CONSTRUCTION AND/OR EXCAVATION TO PREVENT SILT INTRUSION UPON ADJACENT LOTS. IF CONSTRUCTION OCCURS SIMULTANEOUSLY ON ADJACENT LOTS AND THE LOTS HAVE THE SAME OWNER DURING CONSTRUCTION, THE SILT FENCE ALONG THE COMMON LOT LINE MAY BE ELIMINATED.

17. CONSTRUCTION ROADS AND PARKING AREAS SHALL BE STABILIZED WHEREVER THEY ARE CONSTRUCTED, WHETHER PERMANENT OR TEMPORARY, FOR THE USE OF CONSTRUCTION TRAFFIC.

18. MAINTAIN AND REMOVE ALL SEDIMENT CONTROLS AS SPECIFIED IN THE STANDARD DETAILS. THE CONTRACTOR SHALL REMOVE ALL ACCUMULATED SEDIMENT FROM THE CATCH BASINS, DRYWELLS, UTILITY TRENCHES AND STORM PIPES PRIOR TO ACCEPTANCE BY THE CITY.

19. SEDIMENT CONTROL BMPs SHALL BE INSPECTED WEEKLY AND AFTER ANY STORM EVENT PRODUCING RUNOFF. THE INSPECTION FREQUENCY FOR STABILIZED, INACTIVE SITES SHALL BE ONCE EVERY TWO WEEKS OR MORE FREQUENTLY AS DETERMINED BY THE LOCAL PERMITTING AUTHORITY BASED ON THE LEVEL OF SOIL STABILITY AND POTENTIAL FOR ADVERSE ENVIRONMENTAL IMPACTS.

20. ALL TEMPORARY EROSION PREVENTION AND SEDIMENT CONTROL MEASURES SHALL BE REMOVED WITHIN 30 DAYS AFTER SITE STABILIZATION IS ACHIEVED OR AFTER TEMPORARY BMPs ARE NO LONGER NEEDED. TRAPPED SEDIMENT SHALL BE REMOVED OR STABILIZED ON SITE. DISTURBED SOIL AREAS RESULTING FROM REMOVAL SHALL BE PERMANENTLY STABILIZED.

21. IN AREAS SUBJECT TO SURFACE AND AIR MOVEMENT OF DUST ONE OR MORE OF THE FOLLOWING PREVENTATIVE MEASURES SHALL BE TAKEN FOR DUST CONTROL:
–MINIMIZE THE PERIOD OF SOIL EXPOSURE THROUGH THE USE OF TEMPORARY GROUND COVER AND OTHER TEMPORARY STABILIZATION PRACTICES.
–SPRINKLE THE SITE WITH WATER UNTIL THE SURFACE IS WET.
–SPRAY EXPOSED SOIL AREAS WITH A DUST PALLIATIVE. NOTE: USE OF PETROLEUM PRODUCTS OR POTENTIALLY HAZARDOUS MATERIALS ARE PROHIBITED

22. EXPOSED SURFACES THAT WILL NOT BE BROUGHT TO FINAL GRADING OR GIVEN A PERMANENT COVER TREATMENT WITHIN 30 DAYS OF THE EXPOSURE SHALL HAVE SEED MIX AND MULCH PLACED TO STABILIZE THE SOIL AND REDUCE EROSION SEDIMENTATION. SEEDED AREAS SHALL BE CHECKED REGULARLY TO ASSURE A GOOD STAND OF GRASS IS BEING MAINTAINED. AREAS THAT FAIL TO ESTABLISH VEGETATION COVER ADEQUATE TO PREVENT EROSION WILL BE RESEEDED AS SOON AS SUCH AREAS ARE IDENTIFIED.

23. APPLY AN APPROVED TEMPORARY SEEDING MIXTURE TO THE PREPARED SEED BED AT A RATE OF 120 LBS/ACRE. NOTE: "HYDROSEEDING" APPLICATIONS WITH APPROVED SEED–MULCH–FERTILIZER MIXTURES MAY ALSO BE USED.

EROSION CONTROL GENERAL NOTES II

PLAN #

CITY OF LA CENTER APPROVED

Bart Stepp, PE 7/23/09

CITY ENGINEER DATE

REVISIONS:	DATE:	DRAWN:	DESIGNED:

ER-1B

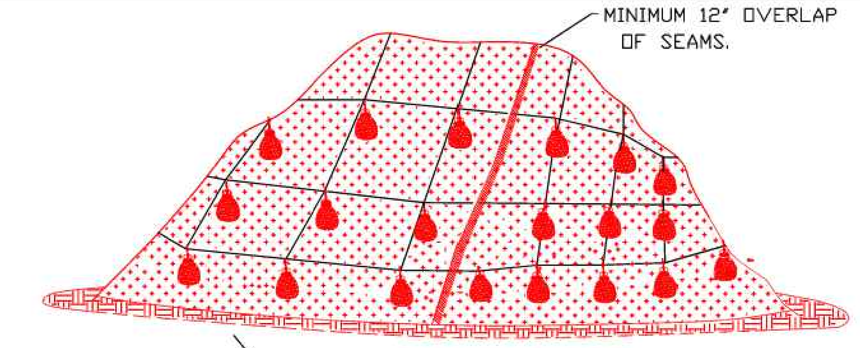

PLASTIC SHEETING

NOTES:

1. PLASTIC SHEETING IS USED TO PROVIDE IMMEDIATE PROTECTION TO SLOPES AND STOCKPILES.
2. DO NOT USE PLASTIC COVERING UPSLOPE OF AREAS SUCH AS STEEP AND/OR UNSTABLE SLOPES THAT MIGHT BE ADVERSELY AFFECTED BY CONCENTRATED RUNOFF.
3. WHEN POSSIBLE, INSTALL AN INTERCEPTOR DIKE AT THE TOP OF THE PLASTIC TO DIVERT FLOWS AWAY FROM THE PLASTIC.
4. TOE–IN THE TOP OF THE SHEETING IN A 6"x6" TRENCH BACKFILLED WITH COMPACTED NATIVE MATERIAL.
5. INSTALL A GRAVEL BERM, RIPRAP, OR OTHER SUITABLE PROTECTION AT THE TOP OF THE SLOPE IN ORDER TO DISSIPATE RUNOFF VELOCITY.
6. ANCHOR THE PLASTIC USING SANDBAGS OR OTHER SUITABLE TETHERED ANCHOR SYSTEM SPACED ON A 10' GRID SPACING IN ALL DIRECTIONS.
7. OVERLAP SEAMS 1–2', TAPE, ROLL AND STAKE THE SEAMS AND THEN WEIGH DOWN THE ENTIRE LENGTH.
8. PROVIDE ENERGY DISSIPATION AT TOE WHEN NEEDED.
9. REPLACE TORN SHEETS AND REPAIR OPEN SEAMS. COMPLETELY REMOVE AND REPLACE PLASTIC WHEN IT BEGINS TO DETERIORATE.

PLASTIC SHEETING

PLAN #

CITY OF LA CENTER APPROVED

Bart Stepp, PE 7/23/09

CITY ENGINEER DATE

REVISIONS:	DATE:	DRAWN:	DESIGNED:

ER-6

DRAWN BY: BILL BERENS

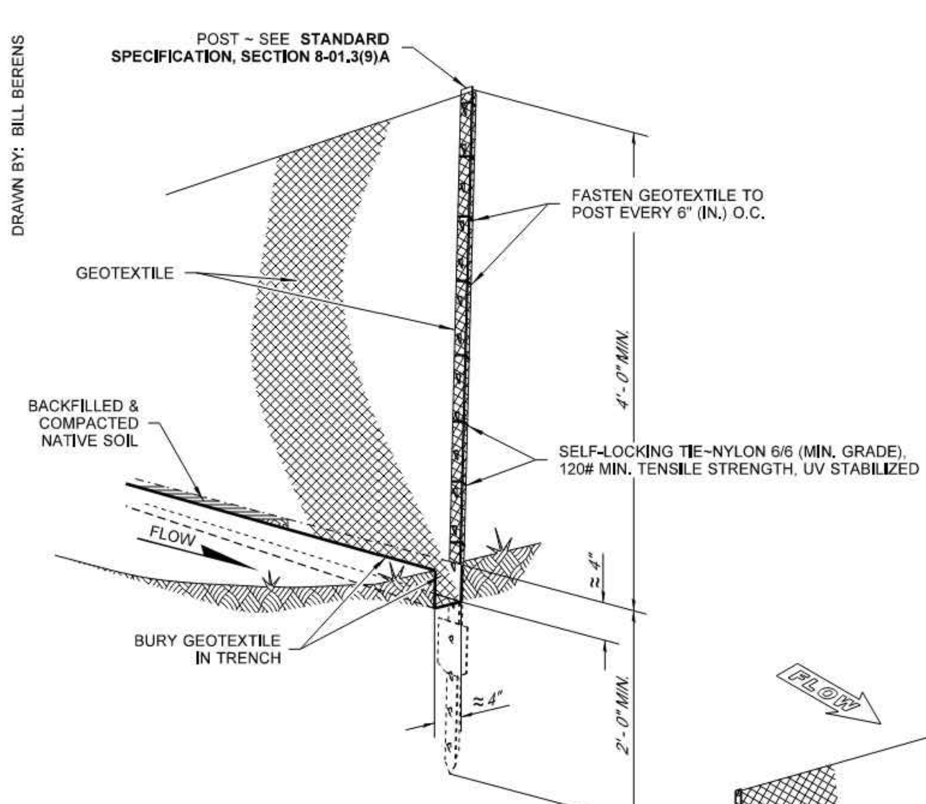

NOTE

DURING EXCAVATION, MINIMIZE DISTURBING THE GROUND AROUND TRENCH AS MUCH AS IS FEASIBLE, AND SMOOTH SURFACE FOLLOWING EXCAVATION TO AVOID CONCENTRATING FLOWS. COMPACTION MUST BE ADEQUATE TO PREVENT UNDERCUTTING FLOWS.

TYPICAL INSTALLATION DETAIL
(STEEL POSTS SHOWN)

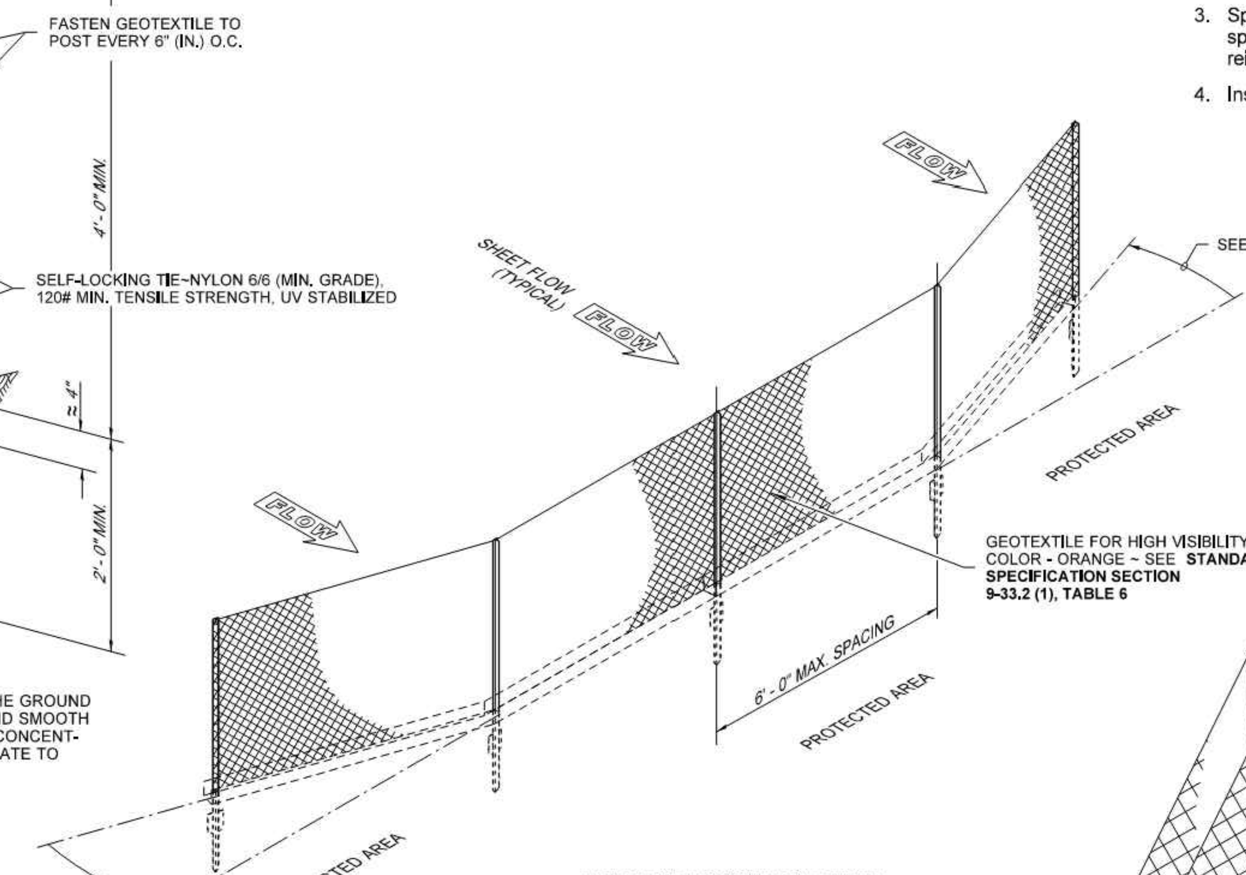

TYPICAL HIGH VISIBILITY SILT FENCE WITHOUT BACKUP SUPPORT
ISOMETRIC
(STEEL POSTS SHOWN)

NOTES

1. Angle Terminal end uphill 24" (in) to 48" (in) to prevent flow around fence (Typical).
2. Perform maintenance in accordance with **Standard Specification, Sections 8-01.3(9)A and 8-01.3(15).**
3. Splices shall never be placed in low spots or sump locations. If splices are located in low or sump areas, the fence may need to be reinstalled unless the Project Engineer approves the installation.
4. Install silt fencing parallel to mapped contour lines.

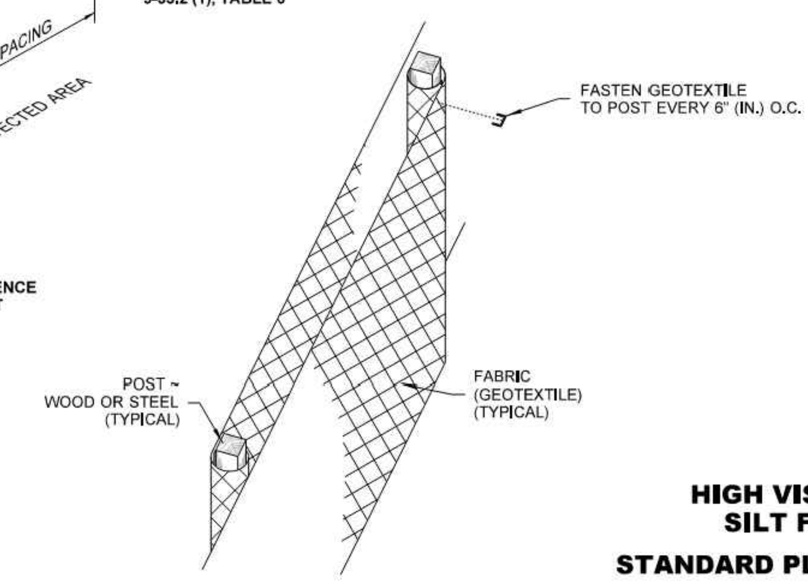

SPLICED FENCE SECTIONS SHALL BE CLOSE ENOUGH TOGETHER TO PREVENT SILT LADEN WATER FROM ESCAPING THROUGH THE FENCE AT THE OVERLAP. JOINING SECTIONS SHALL NOT BE PLACED IN LOW SPOTS OR IN SUMP LOCATIONS.

SPLICE DETAIL
(WOOD POSTS SHOWN)

HIGH VISIBILITY SILT FENCE

STANDARD PLAN I-30.17-01

SHEET 1 OF 1 SHEET

P:\02-Vancouver\CLC (City of La Center)\CLC-07 (Public Works Operation Center)\CLC07-DWGS\Sheets\ D1.3 - DETAILS.dwg

DETAILS

PUBLIC WORKS SITE IMPROVEMENTS

LA CENTER, WASHINGTON

HHPR
Harper Houf Peterson Righellis Inc.
ENGINEERS ◆ PLANNERS
LANDSCAPE ARCHITECTS ◆ SURVEYORS
1220 Main Street, Suite 150, Vancouver, WA 98660
phone: 360.750.1131 www.hhpr.com fax: 360.750.1141

DALLIN J. WISE
STATE OF WASHINGTON
21015676
REGISTERED PROFESSIONAL ENGINEER
10/3/2025

DESIGNED: DJW
DRAWN: DJW
CHECKED: BMH
DATE: 10/3/2025

REVISIONS

DATE	NO.	DESCRIPTION

SHEET NO.

D1.3

JOB NO. CLC-07

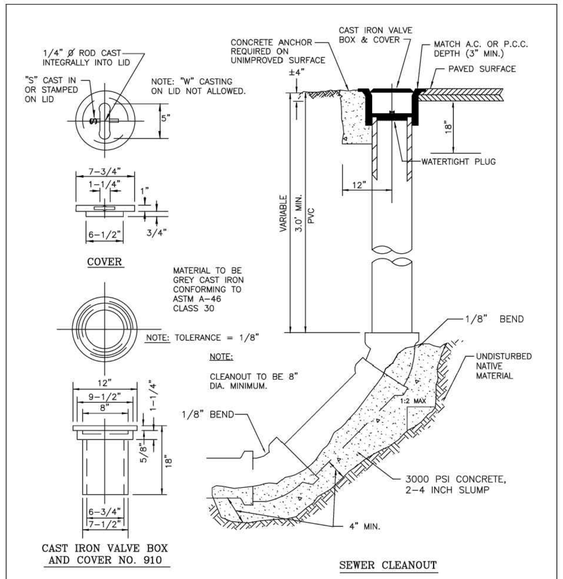

STANDARD SEWER CLEANOUT					PLAN #
CITY OF LA CENTER APPROVED	REVISIONS:	DATE:	DRAWN:	DESIGNED:	SS-14
Basil Stapp, PE 7/23/09					
CITY ENGINEER DATE					

DETAILS

PUBLIC WORKS SITE IMPROVEMENTS

LA CENTER, WASHINGTON

Harper Houf Peterson Righellis Inc.
ENGINEERS★PLANNERS
LANDSCAPE ARCHITECTS★SURVEYORS
1220 Main Street, Suite 150, Vancouver, WA 98660
phone: 360.750.1131 www.hhpr.com fax: 360.750.1141

STATE OF WASHINGTON
21015676
REGISTERED PROFESSIONAL ENGINEER
10/3/2025

DESIGNED:	DJW
DRAWN:	DJW
CHECKED:	BMH
DATE:	10/3/2025

REVISIONS

DATE	NO.	DESCRIPTION

SHEET NO.

D1.4

JOB NO. CLC-07

P:\02-Vancouver\CLC (City of La Center)\CLC-07 (Public Works Operation Center)\CLC07-DWG\SI\Sheets\ D1.4 - DETAILS.dwg

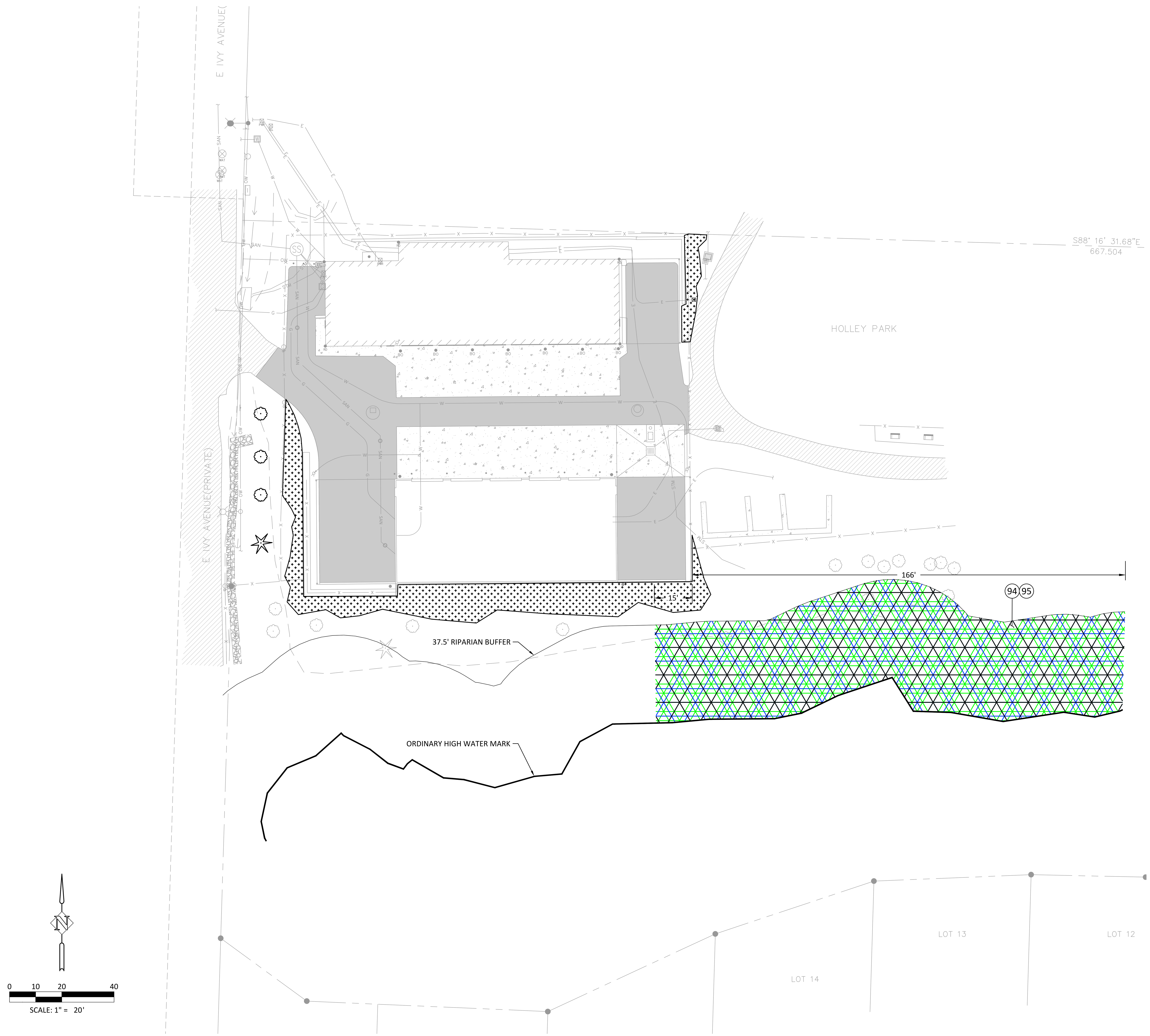

CONSTRUCTION NOTES:

(94) SELECTIVE CLEARING INVASIVE SPECIES PER PLANTING NOTES BELOW.

(95) REPLANT CLEARED AREAS PER PLANT TABLE AND PLANTING NOTES BELOW.

Habit	Scientific Name	Common Name	Form	Size	Quantity	Spacing
Tree	*Acer macrophyllum*	Bigleaf Maple	Bare Root	24" min.	21	12' O.C.
Tree	*Pseudotsuga menziesii*	Douglas Fir	Plug	12" min.	21	12' O.C.
Total Trees: 42						
Shrub	*Corylus cornuta*	Beaked Hazelnut	Bare Root	18" min.	95	4' O.C.
Shrub	*Mahonia nervosa*	Dull Oregon Grape	Bare Root	6" min.	95	4' O.C.
Shrub	*Rubus parviflorus*	Thimbleberry	Bare Root	18" min	95	4' O.C.
Shrub	*Symphoricarpus albus*	Common Snowberry	Bare Root	18" min.	95	4' O.C.
Total Shrubs: 380						
Fern	*Polystichum munitum*	Western Swordfern	Container	1 gallon	504	Clusters of 3 plants spaced 6' O.C.
Total Ferns: 504						

*MITIGATION AREA = 7,060 S.F.

Planting Plan Notes

Native vegetation should be preserved to the greatest extent possible.

Contractor shall remove all weeds and invasive species prior to planting.

All herbicide application, weed removal, and plant installation activities should be overseen by a person with experience in Pacific Northwest Native and Invasive Plant Communities.

Contractor to install 3" layer of bark mulch at all trees and shrubs.

Quantities of plant materials shall be as determined by contractor in accordance with specified spacing or location on plan. Material quantities shown in the table assume full area planting. Actual quantities shall be verified by contractor prior to installation. surplus or shortages of plant quantities shall be responsibility of contractor.

Landscape contractor shall maintain plantings for duration of 2-year warranty period after installation and guarantee all plantings to be in satisfactory health. Landscape contractor shall replace all damaged, dead, or dying plants covered by warranty within 30 days of initial identification of condition.

LEGEND

TREES 12' O.C.

FERN CLUSTERS 6' O.C.

SHRUBS 4' O.C.

RIPARIAN BUFFER MITIGATION PLAN
PUBLIC WORKS SITE IMPROVEMENTS
LA CENTER, WASHINGTON

HHPR
Harper Houf Peterson Righellis Inc.
ENGINEERS ◆ PLANNERS
LANDSCAPE ARCHITECTS ◆ SURVEYORS
1220 Main Street, Suite 150, Vancouver, WA 98660
phone: 360.750.1131 www.hhpr.com fax: 360.750.1141

DALLIN J. WISE
STATE OF WASHINGTON
21015676
REGISTERED
PROFESSIONAL ENGINEER
10/3/2025

DESIGNED: DJW
DRAWN: DJW
CHECKED: BMH
DATE: 10/3/2025

REVISIONS

DATE	NO.	DESCRIPTION

SHEET NO.
M1.0

JOB NO. CLC-07

P:\02-Vancouver\CLC (City of La Center)\CLC-07 (Public Works Operation Center)\CLC07-DWGS\Sheets\ M1.0 - RIPARIAN BUFFER MITIGATION PLAN.dwg

DIVISION 0 - DESIGN PARAMETERS

A. DESIGN CRITERIA
1. CURRENT 2021 IBC PLUS WA AMENDMENTS

B. ADDITIONAL CODES, LATEST EDITION
1. REFER TO STRUCTURAL NOTES

DIVISION 1 - GENERAL REQUIREMENTS

A. COORDINATION:
1. COORDINATE ALL CONSTRUCTION TRADES AND PROCEDURES TO BE IN CONFORMANCE WITH ALL STATE AND LOCAL REQUIREMENTS.

B. REFERENCE STANDARDS:
1. CURRENT IBC PLUS ALL STATE AND LOCAL REQUIREMENTS FOR THE WORK.

C. SUBMITTALS:
1. REFER TO DEFERRED SUBMITTALS SECTION, THIS SHEET

D. QUALITY CONTROL:
1. COMPLY WITH SPECIFIED STANDARDS AS MINIMUM QUALITY FOR THE WORK EXCEPT WHERE THE DRAWINGS, CODES, TOLERANCES, OR SPECIFIC REQUIREMENTS INDICATE HIGHER STANDARDS OR MORE PRECISE WORKMANSHIP.

2. CONTRACTOR SHALL BE SOLELY RESPONSIBLE FOR CORRECTING ANY SITE CONDITIONS CAUSED BY THE CONSTRUCTION ACTIVITIES.

3. CONTRACTOR SHALL PROTECT ALL EXISTING AND NEW UTILITIES, STRUCTURES, AND EQUIPMENT FROM DAMAGE.

4. CONTRACTOR AND/OR SUB-CONTRACTORS SHALL REMOVE ALL MATERIAL(S) WASTE, TRASH, ETC. AND SHALL LEAVE THE BUILDING, PARKING/DRIVE AREAS, LANDSCAPED AREAS AND SITE IN A THOROUGHLY CLEAN CONDITION UPON COMPLETION OF ALL WORK.

E. TESTING AND INSPECTIONS:
1. INSPECTIONS SHALL CONFORM TO OSSC CODE, LATEST EDITIONS, WITHOUT EXCEPTIONS.

2. SEE "SPECIAL INSPECTIONS" HEADING IN STRUCTURAL NOTES.

3. ALL INSPECTIONS AND TESTING WITH RELATED SAMPLING, WHETHER REQUIRED BY THE CONSTRUCTION DOCUMENTS OR BY CODES(S) SHALL BE PERFORMED BY AN INDEPENDENT TESTING AGENCY MEETING THE REQUIREMENTS OF ASTM E329. THE OWNER SHALL SECURE AND PAY FOR THE SERVICES OF THE INDEPENDENT TESTING AGENCY TO PERFORM ALL INSPECTIONS AND TESTS.

DIVISION 2 - SITE WORK

A. GENERAL:
1. FOR FINISHED GRADES, TOP OF PAVING & SPOT ELEVATIONS SEE DRAWINGS AND SPECIFICATIONS PREPARED BY THE CIVIL ENGINEER.

2. FOOTINGS SHALL REST ON FIRM NATURAL UNDISTURBED SOIL. ALL DISTURBED SOILS SHALL BE REMOVED BY HAND FROM EXCAVATION TO NEAT LINES.

3. NO EXCAVATION SHALL BE MADE BELOW ANY FOOTING CLOSER THAN A SLOPE OF ONE HORIZONTAL TO ONE VERTICAL TO THE BOTTOM OF THE FOOTING.

4. BACKFILL ALL PIPE TRENCH EXCAVATIONS BELOW FOOTINGS WITH LEAN CONCRETE TO THE BOTTOM OF THE FOOTING.

5. ALL GRANULAR FILLS (3/4" MINUS-MAX) SHALL BE UNIFORMLY GRADED AND COMPACTED TO A MINIMUM OF 95 PERCENT OF MAXIMUM DENSITY AS DETERMINED IN ACCORDANCE WITH ASTM TEST METHOD D1557 (MODIFIED PROCTOR) UNLESS OTHERWISE SPECIFIED BY THE GEOTECHNICAL REPORT.

DIVISION 3 - CONCRETE

A. REFERENCES:
1. REFER TO STRUCTURAL NOTES

B. FOUNDATIONS:
1. REFER TO STRUCTURAL NOTES

C. CONCRETE REINFORCING:
1. REFER TO STRUCTURAL NOTES

D. CAST-IN-PLACE CONCRETE:
1. CONCRETE FINISHING

a. FINISH CONCRETE FLOOR SURFACES IN ACCORDANCE WITH ACI 301

b. STEEL TROWEL AND PROVIDE LIGHT BROOM FINISH ON EXTERIOR WALKWAYS, UNLESS NOTED OTHERWISE ON PLANS. FINISH CURB AS SHOWN ON THE CIVIL DRAWINGS.

c. PROVIDE ROUGH, SCORED FINISH FOR RECEIVING GROUTS, OVERLAYS, OR TOPPED SLABS, IF/AS MAY BE REQUIRED IN THE FIELD.

d. SCREED TOPS OF FOOTINGS SMOOTH, U.N.O.

e. STEEL TROWEL SURFACES WHICH WILL RECEIVE CARPETING, RESILIENT FLOORING OR THIN SET CERAMIC TILE, WAREHOUSE/SHOP AREA RESTROOM FLOORS).

f. STEEL TROWEL SURFACES AT WAREHOUSE FLOORS - TYPICAL.

E. GROUTING:
1. REFER TO STRUCTURAL NOTES

DIVISION 5 - METALS

A. REFERENCES
1. REFER TO STRUCTURAL NOTES

B. STRUCTURAL STEEL
1. REFER TO STRUCTURAL NOTES

C. METAL FABRICATIONS
1. REFER TO STRUCTURAL NOTES

DIVISION 8 - WOODS

A. REFERENCES
1. REFER TO STRUCTURAL NOTES

DIVISION 7 - THERMAL AND MOISTURE PROTECTION

A. REFERENCES
1. ALL WORK SHALL COMPLY WITH ALL APPLICABLE TIMA, ASTM AND NRCA CODES AND STANDARDS.

B. INSULATION
1. ROOF INSULATION
a. MATERIAL: FACED, FIBERGLASS BATT INSULATION
LOCATE FACING TOWARD THE WARM SIDE OF THE ROOF ASSEMBLY. INSULATION SHALL HAVE A FLAME SPREAD RATING OF 25 MAX, AND A SMOKE DENSITY RATING OF 450 MAX.
b. THERMAL RESISTANCE: R-38 (MIN).

2. EXTERIOR WALLS
a. CONTRACTOR TO PROVIDE RIGID INSULATION AT INTERIOR FACE OF WALL. CONFIRM REQUIREMENTS WITH OWNER.

3. CAULKING AND SEALING
a. CAULK ALL JOINTS BETWEEN STEEL PANELS, DISSIMILAR MATERIALS, AND AROUND ALL DOOR AND WINDOW FRAMES AND OTHER LOCATIONS AS REQUIRED FOR "WEATHER & AIR" TIGHTNESS.

b. APPLICATOR TO INSPECT PRIOR TO INSTALLATION. REMOVE FOREIGN MATERIALS AND MOISTURE. PROCEEDING WITH WORK INDICATES ACCEPTANCE OF SURFACES.

c. PROVIDE COMPRESSIBLE BACKUP VINYL OR FILLER RODS ON ALL JOINTS OVER 3/8" DEPTH. BACKUP RODS SHALL BE A MINIMUM OF 1-1/2 TIMES JOINT WIDTH. INSULATION SHALL COMPLY WITH MANUFACTURERS RECOMMENDATIONS.

d. SEALANT COLOR TO MATCH ADJACENT MATERIALS AT INTERIOR SURFACES.

e. APPLY EXPOSED, PAINTABLE, SEALANT PRIOR TO PAINTING AND VERIFY COMPATIBILITY WITH PAINT BEING USED.

f. MATERIALS
1. STEEL WALL JOINTS - LOW MODULUS, TWO - PART, NON-SAG, POLYURETHANE RUBBER.

2. DOOR AND WINDOW FRAMES - SILICONE RUBBER, NON-ACID POROUS BOND TYPE AT JOINTS ABUTTING CONCRETE AND ACID NON-POROUS TYPE ELSEWHERE, VERIFY COMPATIBILITY WITH PAINT BEING USED.

4. ALL ITEMS TO BE SUBMITTED TO OWNER FOR REVIEW AND APPROVAL PRIOR TO CONSTRUCTION.

DIVISION 8 - DOORS AND WINDOWS

A. REFERENCES:
WORK TO COMPLY WITH ALL APPLICABLE CODES AND STANDARDS FOR MANUFACTURING AND INSTALLATION OF DOORS, GLASS AND GLAZING SYSTEMS.

B. HOLLOW METAL DOORS AND FRAMES - EXTERIOR:
1. APPROVED MANUFACTURERS:
STEEL CRAFT: MASCO INDUSTRIES COMPANY: CECO CURRIES OR PER APPROVED SUBMITTAL TO THE ARCHITECT / ENGINEER TEAM

2. FRAMES:
16 OR 18 GAUGE 5 1/2" JAMB DEPTH SINGLE RABBET WELDED CORNERS WITH ANCHORS TO SUIT WALL STRUCTURE. INSTALL WITH INSIDE FRAME FACE SURFACES "FLUSH" WITH INTERIOR FACE OF STEEL WALL PANELS. PROVIDE MAKE-UP COMPONENTS AS REQUIRED TO FIT AND FLASH TO RESULT IN A WATER-TIGHT DETAIL.

3. DOORS:
16 OR 18 GAUGE AT EXTERIOR LOCATIONS, (18 GAUGE AT INTERIOR LOCATIONS). FLUSH PANEL WITH NON-WARPING, INSULATED CORE. MORTISED AND REINFORCED TO RECEIVE HINGES, LOCK SETS AND CLOSERS. DOOR "U" VALUE NOT TO EXCEED 0.54, - SEE DRAWINGS.

4. FINISH:
FACTORY BACKED ON PRIMER, PAINT TO MATCH ADJACENT SURFACES, OR AS NOTED ON THE EXTERIOR BUILDING ELEVATIONS.

5. ALL ITEMS TO BE SUBMITTED TO OWNER FOR REVIEW AND APPROVAL PRIOR TO CONSTRUCTION.

6. CONTRACTOR SHALL SUBMIT FLASHING DETAILING TO OWNER FOR REVIEW AND APPROVAL PRIOR TO CONSTRUCTION.

DIVISION 9 - FINISHES

A. PRODUCTS:
1. INTERIOR BOARD 5/8" THICK, MIN., TYPE "X" BY "U.S. GYPSUM", OR "GOLD BOND" OR "KAISER" OR AS INDICATED ON THE DRAWINGS.

2. ACCESSORIES: PROVIDE RADIUSED TAPE ON CORNER BEADS PER THE DRAWINGS AND FASTENERS AS REQUIRED. PROVIDE SQUARE METAL EDGE BEADS AT ALL EXPOSED BOARD EDGES AND WHERE ABUTTING DISSIMILAR SURFACES.

3. FINISH: TAPE, FILL AND SAND FOR SMOOTH FINISH AT INTERIOR ROOM AREAS.

B. PAINTING:
1. MANUFACTURES: MILLER, PITTSBURGH, FULLER AND SHERWIN-WILLIAMS. ALL COLORS AND SHEENS PER BUILDING DRAWINGS. PROVIDE 24" SQUARE "DRAW-DOWN" SAMPLES OF EXTERIOR WALL COLORS FOR OWNER'S APPROVAL PRIOR TO STARTING WORK.

2. EXTERIOR:
a. FERROUS, GALVANIZED METALS: PRIME - ONE COAT RUST INHIBITIVE PRIMER (OMIT IF SHOP PRIMED OR PREPAINTED): TWO COATS EXTERIOR ALKYD ENAMEL, SEMI-GLOSS. PRIME & PAINT ALL WEATHER EXPOSED FACES OF GALVANIZED METAL FLASHINGS.

b. METAL DOORS AND FRAMES: REMOVE ANY RUST OR SCALE AND SPOT PRIME AS REQUIRED. TWO COATS EXTERIOR ALKYD ENAMEL, SEMI-GLOSS AT ALL SURFACES. COLORS AS SHOWN ON BUILDING DRAWINGS.

3. INTERIOR:
GENERAL - ONE (1) COAT, AIRLESS SPRAY (OFF - WHITE LATEX) ON INTERIOR WALLS

a. GYPSUM BOARD FINISH TWO (2) COATS OF FLAT LATEX PAINT. "EGGSHELL", OVER ON (1) COAT GYP. BD. SEALER/PRIMER.

b. FINAL FINISH / PAINT COLOR SCHEDULE TO BE BY "OWNER".

4. RESTROOMS:
a. FLOORS AND WALL BASE TO BE SMOOTH, HARD, NON - ABSORBENT SURFACE SHEET LINOLEUM, PATTERN AND COLOR BY OWNER. BASE TO BE NON-ABSORBENT, 4" TALL (MIN), WITH COLOR SELECTED BY OWNER.

b. WALLS OF ALL TOILET ROOMS TO BE SHEET LINOLEUM AS NOTED ABOVE TO A HEIGHT OF 4 FEET ABOVE FINISH FLOOR.

5. ALL ITEMS TO BE SUBMITTED TO OWNER FOR REVIEW AND APPROVAL PRIOR TO CONSTRUCTION.

DIVISION 10 - SPECIALTIES
NOT USED

DIVISION 11 - EQUIPMENT
NOT USED

DIVISION 12 - FURNISHINGS
NOT USED

DIVISION 13 - NOT USED

DIVISION 14 - CONVEYING SYSTEMS
NOT USED

DIVISION 15 - MECHANICAL (AND/OR PLUMBING) - BIDDER DESIGNED

PER SEPARATE PLANS & PERMIT(S), (SUBMITTALS & FEES) BY MECHANICAL/PLUMBING SUB-CONTRACTOR(S) AS REQUIRED BY LOCAL CODES & LOCAL BUILDING DEPARTMENT. MUST BE SUBMITTED AS A DEFERRED SUBMITTAL ALONG WITH REQUIRED ENERGY CODE FORMS (PREPARED BY THE MECHANICAL DESIGNER/CONTRACTOR) TO THE ENGINEER/DESIGNER FOR REVIEW PRIOR TO BUILDING DEPARTMENT SUBMITTAL.

CONTRACTOR TO PROVIDE FULL TEMPERATURE HVAC SYSTEMS W/ AIR CONDITIONING AND DIGITAL CONTROL THAT IS SEPARATE IN EACH REST ROOM.

ALL MECHANICAL AND PLUMBING REQUIREMENTS REVIEWED AND APPROVED BY OWNER PRIOR CONSTRUCTION.

DIVISION 16 - ELECTRICAL - BIDDER DESIGNED

PER SEPARATE PLANS & PERMIT(S), (SUBMITTALS & FEES) BY ELECTRICAL SUB-CONTRACTOR(S) AS REQUIRED BY LOCAL CODES & LOCAL BUILDING DEPARTMENT. MUST BE SUBMITTED AS A DEFERRED SUBMITTAL ALONG WITH REQUIRED ENERGY CODE FORMS (PREPARED BY THE ELECTRICAL DESIGNER/CONTRACTOR) TO THE ENGINEER/DESIGNER FOR REVIEW PRIOR TO BUILDING DEPARTMENT SUBMITTAL.

CONTRACTOR TO PROVIDE LIGHTED EXIT SIGNAGE AT EACH EXIT DOOR - TYPICAL THROUGHOUT IN CONFORMANCE WITH ALL STATE AND LOCAL CODES.

PROVIDE ALL ELECTRICAL SERVICES AND OUTLETS AS PER MINIMUM CODE AND PER OWNER.

ALL ELECTRICAL REQUIREMENTS REVIEWED AND APPROVED BY OWNER PRIOR CONSTRUCTION.

DEFERRED PROJECT SUBMITTALS

THE FOLLOWING WORK, COMPONENTS, SYSTEMS AND THEIR ASSOCIATED PLANS, CALCULATIONS, DIAGRAMS, SHOP DRAWINGS AND SPECIFICATIONS SHALL BE SUBMITTED TO THE ENGINEER/DESIGNER FOR REVIEW PRIOR TO SUBMISSION TO THE BUILDING DEPARTMENT. CONTRACTORS / SUPPLIERS SHALL SUBMIT FOUR COMPLETE, OPAQUE COPIES/SETS INCLUDINGANY REQUIRED PERMIT APPLICATION, UNLESS NOTIFIED OTHERWISE. DEFERRED SUBMITTAL SYSTEM, ITEMS, ETC., SHALL NOT BE INSTALLED/CONSTRUCTED UNTIL APPROVED AND PERMITS ISSUED, IF REQUIRED) BY THE BUILDING OFFICIAL.

1. DRAWINGS DETAILS SPECIFICATIONS MECHANICAL SYSTEM PLANS, DETAILS, ETC. & ENERGY CODE FORM(S) AS REQUIRED.

2. ELECTRICAL PLANS, SCHEDULES, DIAGRAMS, ETC & ENERGY CODE FORM(S). AS REQUIRED.

3. PLUMBING PLANS, DIAGRAMS, DETAILS, ETC. AS REQUIRED.

4. ROOF TRUSSES

5. COVERED PARKING (PRE-ENGINEERED METAL BUILDING)

DIVISION 17 - SPECIAL INSPECTION
REFER TO STRUCTURAL NOTES

BUILDING CODE REVIEW NOTES
CONSTRUCTION TYPE: V-B
NON SPRINKLERED STORAGE / SHOP BUILDING
OCCUPANCY S-1; TOTAL OCCUPANT LOAD = 12 (SECTION 1004.8)
TOTAL AREA = 3,400 SF ONE STORY

GENERAL NOTES

PUBLIC WORKS OPERETIONS CENTER

291 EAST IVY AVE. LA CENTER, WA 98629

Harper Houf Peterson Righellis Inc.
ENGINEERS • PLANNERS
LANDSCAPE ARCHITECTS • SURVEYORS
205 SE Spokane Street, Suite 200, Portland, OR 97202
phone: 503.221.1131 www.hhpr.com fax: 503.221.1171

JEFFREY A. SCHWINDT
STATE OF WASHINGTON
45100
STRUCTURAL ENGINEER
PROFESSIONAL ENGINEER

DESIGNED: JAS
DRAWN: HHPR
CHECKED: JAS
DATE: 10/03/2025

REVISIONS

NO.	DATE	DESCRIPTION

SHEET NO.
B1.00

JOB NO.
CLC-07

SHOP RENDERING

SHOP RENDERING

PUBLIC WORKS OPERETIONS CENTER

291 EAST IVY AVE. LA CENTER, WA 98629

Harper Houf Peterson Righellis Inc.

ENGINEERS • PLANNERS
LANDSCAPE ARCHITECTS • SURVEYORS

205 SE Spokane Street, Suite 200, Portland, OR 97202
phone: 503.221.1131 www.hhpr.com fax: 503.221.1171

JEFFREY A. SCHWINDT
STATE OF WASHINGTON
45100
STRUCTURAL ENGINEER
PROFESSIONAL ENGINEER

DESIGNED: JAS
DRAWN: HHPR
CHECKED: JAS
DATE: 10/03/2025

REVISIONS

NO.	DATE	DESCRIPTION

SHEET NO.

B1.01

JOB NO. CLC-07

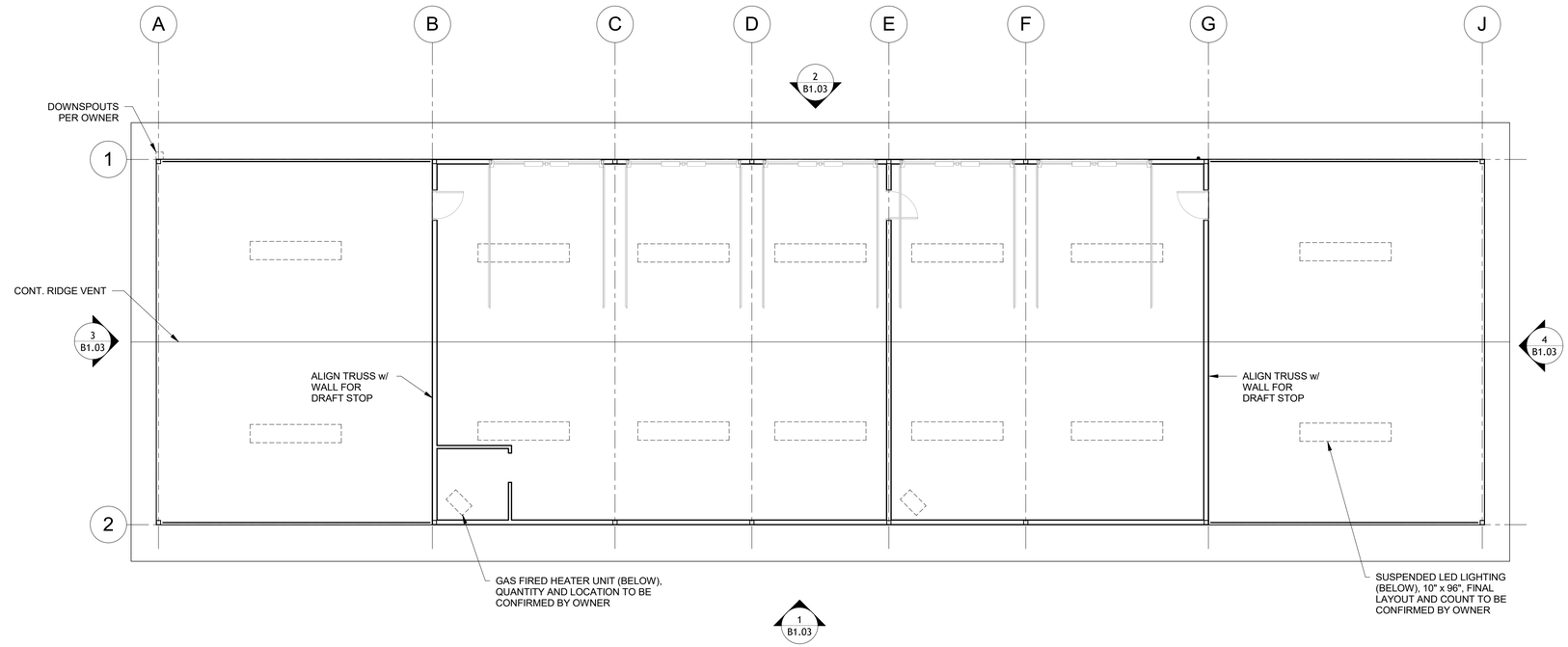

N

2 B1.02 SHOP ROOF PLAN
1/8" = 1'-0"

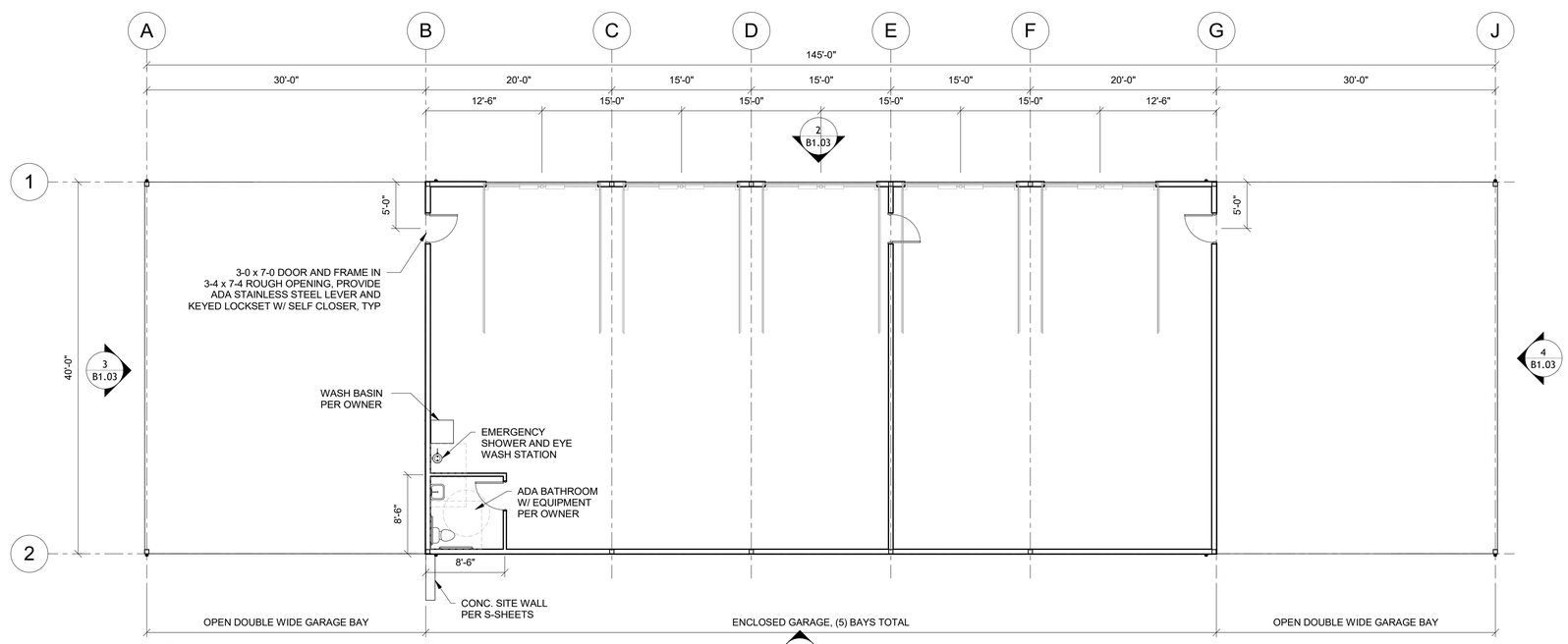

N

1 B1.02 SHOP FLOOR PLAN
1/8" = 1'-0"

SHOP FLOOR / ROOF PLAN

PUBLIC WORKS OPERETIONS CENTER

291 EAST IVY AVE. LA CENTER, WA 98629

Harper Houf Peterson Righellis Inc.
ENGINEERS • PLANNERS
LANDSCAPE ARCHITECTS • SURVEYORS
205 SE Spokane Street, Suite 200, Portland, OR 97202
phone: 503.221.1131 www.hhpr.com fax: 503.221.1171

JEFFREY A. SCHWINDT
STATE OF WASHINGTON
45100
STRUCTURAL ENGINEER
PROFESSIONAL ENGINEER

DESIGNED:	JAS
DRAWN:	HHPR
CHECKED:	JAS
DATE:	10/03/2025

REVISIONS

DATE	NO.	DESCRIPTION

SHEET NO.

B1.02

JOB NO. CLC-07

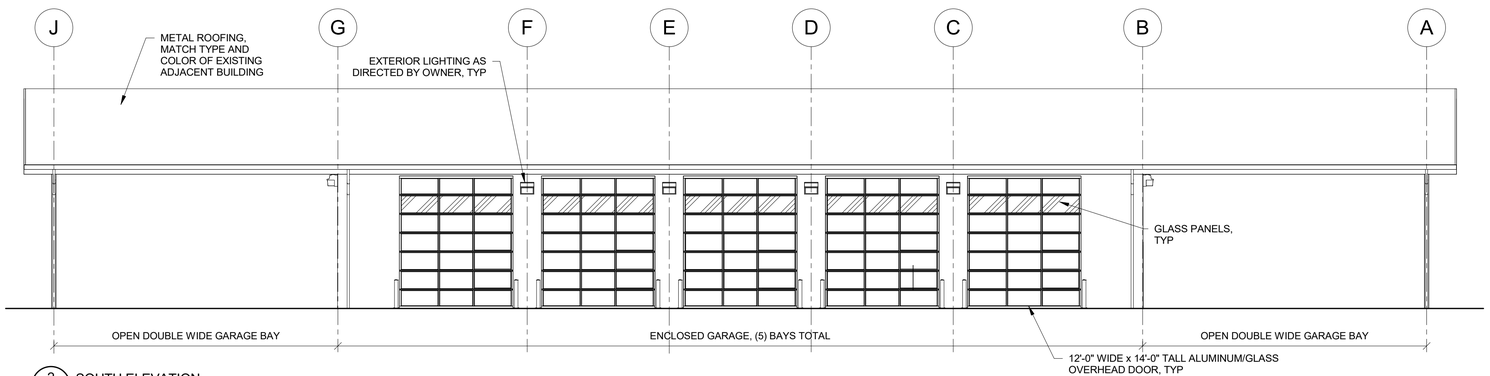

2 B1.03 SOUTH ELEVATION
1/8" = 1'-0"

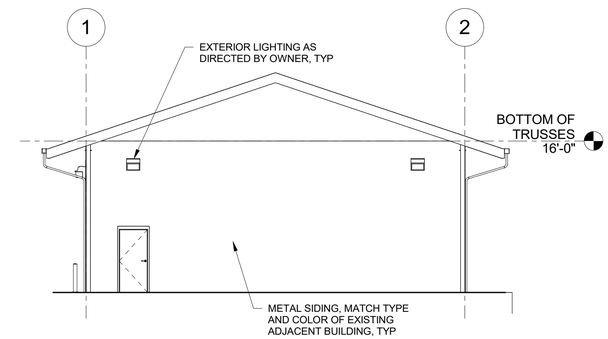

3 B1.03 EAST ELEVATION
1/8" = 1'-0"

1 B1.03 NORTH ELEVATION
1/8" = 1'-0"

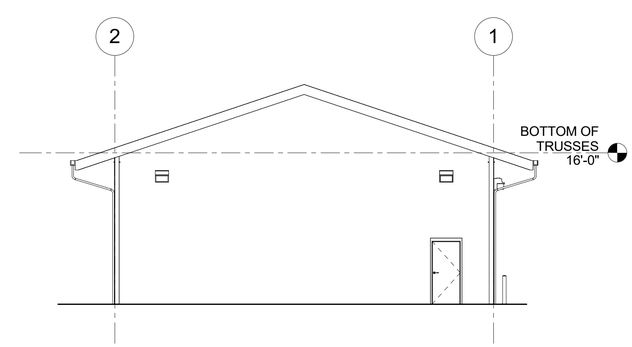

4 B1.03 WEST ELEVATION
1/8" = 1'-0"

SHOP ELEVATIONS

PUBLIC WORKS OPERETIONS CENTER

291 EAST IVY AVE. LA CENTER, WA 98629

Harper Houf Peterson Righellis Inc.
ENGINEERS • PLANNERS
LANDSCAPE ARCHITECTS • SURVEYORS
205 SE Spokane Street, Suite 200, Portland, OR 97202
phone: 503.221.1131 www.hhpr.com fax: 503.221.1171

JEFFREY A. SCHWINDT
STATE OF WASHINGTON
45100
STRUCTURAL ENGINEER
PROFESSIONAL ENGINEER

DESIGNED:	JAS
DRAWN:	HHPR
CHECKED:	JAS
DATE:	10/03/2025

REVISIONS

DATE	NO.	DESCRIPTION

SHEET NO.
B1.03

JOB NO.
CLC-07

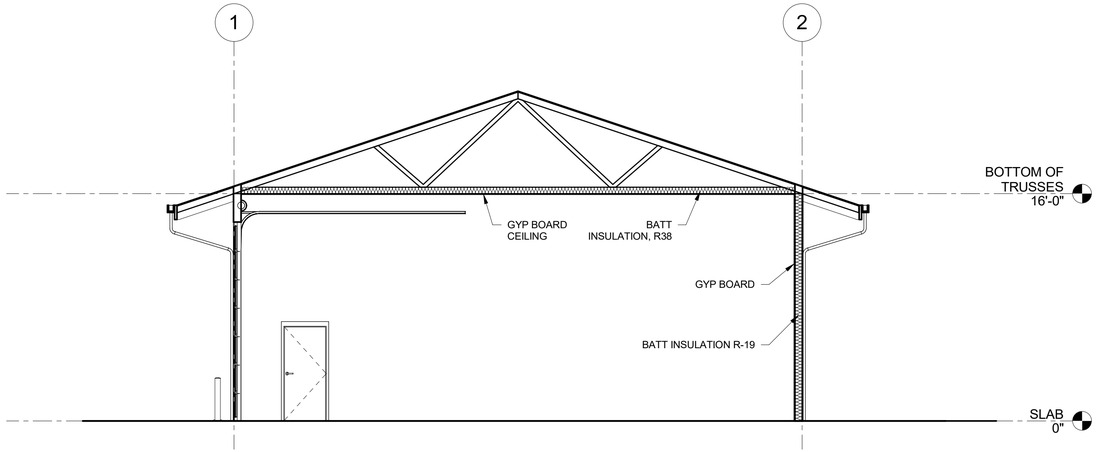

2 B1.04 SECTION
3/16" = 1'-0"

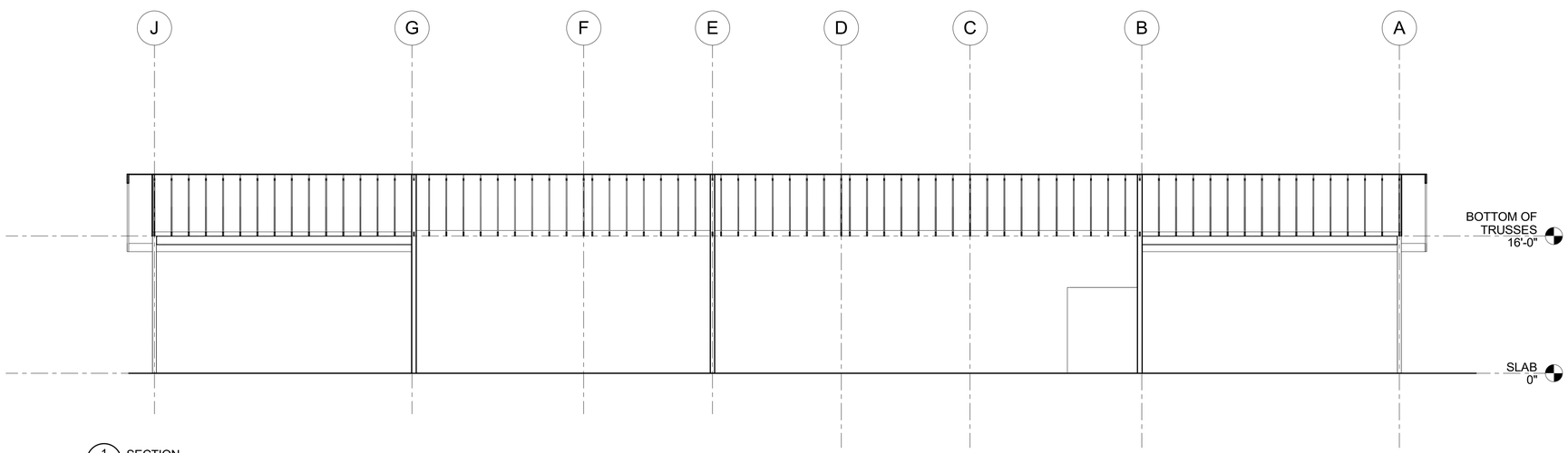

1 B1.04 SECTION
1/8" = 1'-0"

SHOP SECTIONS

PUBLIC WORKS OPERETIONS CENTER

291 EAST IVY AVE. LA CENTER, WA 98629

Harper Houf Peterson Righellis Inc.
ENGINEERS • PLANNERS
LANDSCAPE ARCHITECTS • SURVEYORS
205 SE Spokane Street, Suite 200, Portland, OR 97202
phone: 503.221.1131 www.hhpr.com fax: 503.221.1171

JEFFREY A. SCHWIANDT
STATE OF WASHINGTON
45100
STRUCTURAL ENGINEER
PROFESSIONAL ENGINEER

DESIGNED:	JAS
DRAWN:	HHPR
CHECKED:	JAS
DATE:	10/03/2025

REVISIONS

DATE	NO.	DESCRIPTION

SHEET NO.

B1.04

JOB NO. CLC-07

GENERAL:

1. THESE STRUCTURAL NOTES SUPPLEMENT THE SPECIFICATIONS. ANY DISCREPANCY FOUND AMONG THE DRAWINGS, SPECIFICATIONS, THESE NOTES, AND ANY SITE CONDITIONS SHALL BE REPORTED IN A TIMELY MANNER TO THE ARCHITECT/ENGINEER DESIGN TEAM, WHO SHALL RESPOND TO ANY DISCREPANCY IN WRITING. ANY WORK DONE BY THE CONTRACTOR AFTER DISCOVERY OF SUCH DISCREPANCY SHALL BE DONE AT THE CONTRACTOR'S OWN RISK.
2. THE CONTRACTOR SHALL VERIFY AND COORDINATE THE DIMENSIONS AMONG ALL DRAWINGS PRIOR TO PROCEEDING WITH ANY WORK OR FABRICATION.
3. THE CONTRACTOR IS RESPONSIBLE FOR ALL DEMOLITION AND CONSTRUCTION METHODS, TECHNIQUES, SEQUENCING, AND SAFETY REQUIRED FOR THE WORK.
4. THE CONTRACTOR IS RESPONSIBLE FOR THE DESIGN AND CONSTRUCTION OF ALL ERECTION BRACING, FORM WORK, AND TEMPORARY SHORING REQUIRED FOR THE WORK.
5. THESE NOTES SET MINIMUM STANDARDS FOR CONSTRUCTION. THE DRAWINGS GOVERN OVER THE STRUCTURAL NOTES TO THE EXTENT SHOWN.
6. THE CONTRACTOR SHALL VERIFY ALL DIMENSIONS AND CONDITIONS ON DRAWINGS AND IN THE FIELD. COORDINATE LOCATIONS OF OPENINGS THROUGH FLOOR, ROOFS AND WALLS WITH ARCHITECTURAL, MECHANICAL, AND ELECTRICAL PLANS. NOTIFY OWNER'S REPRESENTATIVE OF ANY DISCREPANCIES.
7. DETAILS SHOWN ON THE DRAWINGS ARE INTENDED TO APPLY AT ALL SIMILAR CONDITIONS AND LOCATIONS.
8. DO NOT SCALE INFORMATION FROM STRUCTURAL DRAWINGS.

DESIGN CODE:

1. 2018 INTERNATIONAL BUILDING CODE (IBC) WITH WA STATE AMENDMENTS
2. ASCE 7-16 AND ACI 318-14.
3. ALL REFERENCE TO OTHER CODES AND STANDARDS (ACI, ASTM, ETC...) SHALL BE PER THE LATEST OR MOST CURRENT EDITION AVAILABLE.
4. DESIGN LOADS:
   ROOF (SNOW LOAD). . . . . 25 PSF + DRIFT

WIND DESIGN	**MAIN WIND FORCE RESISTING SYSTEM**	
	Ultimate Design Wind Speed, V_{ULT} (MPH)	**135**
	Exposure Catagory	**B**
	Internal Pressure Coefficient **Cpi=**	**+/- 0.18**
	Topographic Factor K_{zt}=	**1.0**
	Wind Analysis procedure used:	**Directional**
	COMPONENT & CLADDING PRESSURES for DESIGN (Ultimate 10-SF Tributary)	**PSF**
	Wall Cladding, Typical Zone	**18**
	Wall Cladding, Edge Zone within **10 ft** of Corners	**25**
	Roof Cladding, Middle Zone	**25**
	Roof Cladding, Edge Zone within **10 ft** of Edge	**25**
	Roof Cladding, Corner Zone within **10 ft** of Corners	**25**
	Uplift Load Net	**10**

SEISMIC DESIGN:	**Seismic Design Category** **SDC=**	**D**
	Basic Structural System	**Building Frame**
	Seismic Force Resisting System	**Light Framed Wood Shear Walls**
	Response Modification Factor: **Wood R=**	**6.5**
	System Over Strength Factor **Omega=**	**2.5**
	Deflection Amplification Factor **Cd=**	**5**
	Site Classification per IBC 1613.3.2 & ASCE 7-16 Table 1.5-2 **Site Class=**	**D**
	Seismic Importance Factor per ASCE 7-16 Table 1.5-2 **Ie=**	**1.0**
	Spectral Response Acceleration (Short Period) S_s=	**0.788**
	Spectral Response Acceleration (1-Second Period) S_1=	**0.376**
	Spectral Design Response Coefficient (Short Period) S_{DS}=	**0.7 g**
	Spectral Design Response Coefficient (1-Second Period) S_{D1}=	**0.5 g**
	Seismic Response Coefficient(s) **Concrete Cs=**	**0.150**
	Wood Cs=	**0.108**
	Redundancy Factor (North/South Direction) **Conc N/S rho=**	**1.0**
	Wood N/S rho=	**1.0**
	Redundancy Factor (East/West Direction) **Conc E/W rho=**	**1.0**
	Wood E/W rho=	**1.0**
	Base shear governed by:	**Seismic**
	Seismic Analysis procedure used:	**Equivalent Lateral Force (ELF)**

FOUNDATIONS:

1. MAXIMUM DESIGN SOIL BEARING PRESSURE = 2,500 PSF PER GEOTECHNICAL REPORT PROVIDED BY COLUMBIA WEST / APEX DATED APRIL 27, 2020
2. FOOTINGS SHALL BE FOUNDED ON FIRM, UNDISTURBED SOIL OR ON APPROVED STRUCTURAL FILL.
3. STRUCTURAL FILL SHALL CONSIST OF CLEAN WELL-GRADED SAND, SAND AND GRAVEL, OR CRUSHED ROCK.
4. THE STRUCTURAL FILL SHALL BE PLACED IN LOOSE LIFTS NOT EXCEEDING 8" IN THICKNESS AND THOROUGHLY COMPACTED TO A DENSE, NON-YIELDING STATE.
5. STRUCTURAL FILL SHALL BE COMPACTED TO 95% OF THE MAXIMUM DRY DENSITY AS OBTAINED BY ASTM MODIFIED PROCTOR.
6. ALL FOOTINGS SHALL BE A MINIMUM OF 1'-6" BELOW FINAL GRADES OR 1'-0" BELOW EXISTING GRADE, WHICHEVER IS LOWER.
7. BOTTOM OF FOOTINGS SHALL BE STEPPED FROM ELEVATION TO ELEVATION AT 2'-0" HORIZONTAL TO 1'-0" VERTICAL STEPS.
8. DO NOT EXCAVATE GREATER THAN A 2H:1V SLOPE BELOW FOOTING.
9. ALL DISTURBED SOIL SHALL BE REMOVED BY HAND OPERATION FROM FOOTING EXCAVATIONS TO NEAT LINES AND REPLACED WITH ENGINEERED FILL IF NECESSARY.
10. PLACEMENT OF ALL FILL SHALL BE OBSERVED AND TESTED FOR RELATIVE COMPACTION BY A QUALIFIED TECHNICIAN AS APPROVED B THE ENGINEER OF RECORD.

CONCRETE (CAST IN PLACE):

1. ALL CONCRETE SHALL BE NORMAL WEIGHT AND SHALL DEVELOP A MINIMUM 28 DAY LABORATORY CURED COMPRESSIVE-CYLINDER STRENGTH OF:
   3,000 PSI FOR FOUNDATIONS
   4,000 PSI FOR ALL SLABS ON GRADE, UNO
2. CONCRETE EXPOSED TO FREEZE/THAW CYCLES SHALL HAVE 5% +- 1% ENTRAINED AIR.
3. CONCRETE SHALL HAVE A MAXIMUM SLUMP OF 4 INCHES.
4. A MINIMUM OF 4 CONCRETE TEST CYLINDERS SHALL BE PROVIDED FOR EACH 100 CU. YARDS OF EACH CONCRETE STRENGTH, EACH DAY. SLUMP, AIR ENTRAINMENT, LOCATION IN STRUCTURE, ETC., SHALL BE MEASURED AND RECORDED FOR EACH SET OF CYLINDERS, PER ASTM. CYLINDERS SHALL BE TESTED AS FOLLOWS:
   1 AT 7 DAYS:
   2 AT 28 DAYS
   1 PRIOR TO REMOVAL OF FORMS FOR SLABS AND BEAMS.
5. CONCRETE CYLINDER MAKING AND TESTING SHALL CONFORM WITH ASTM SPECIFICATIONS.
6. CONCRETE, FORMS, MIXING, PLACING AND CURING SHALL CONFORM TO ACI MANUAL OF CONCRETE PRACTICE, LATEST EDITION, AND SPECIFICATIONS.
7. CONCRETE SHALL BE PLACED IN ONE CONTINUOUS OPERATION.
8. CONSTRUCTION JOINTS IN BEAMS, JOISTS AND SLABS SHALL BE LOCATED AT MID SPAN WITH REINFORCING CONTINUINGTHRU AS IF JOINT DID NOT OCCUR.
9. VERTICAL CONSTRUCTION JOINTS IN WALLS SHALL BE LOCATED MIDWAY BETWEEN COLUMNS.
10. THE SIZE AND LOCATION OF SLEEVES THRU FLOORS OR WALLS FOR MECHANICAL OR ELECTRICAL ACCESS SHALL BE APPROVED BY THE ENGINEER PRIOR TO PLACING CONCRETE.
11. SHORE ALL SELF-SUPPORTING SLABS AND BEAMS UNTIL JOB-CURED CYLINDERS INDICATE A MINIMUM AVERAGE OF 100% OF THE DESIGNATED MINIMUM CYLINDER STRENGTH.
12. CAMBER ALL SLABS AND BEAMS (IN INCHES) UNIFORMLY AN AMOUNT EQUAL TO THE CLEAR SPAN (IN INCHES) DIVIDED BY L/480 AT CENTER OF MEMBER.
13. ALL BOLTS IN CONCRETE SHALL CONFORM TO ASTM SPECIFICATION A307 AND SHALL BE OF THE SIZE INDICATED ON THE DRAWINGS.

PRESSURE TREATED (P.T.) LUMBER:

1. MILD STEEL & UNCOATED ANCHOR BOLTS MAY BE UTILIZED TO INSTALL TYPICAL SILL PLATES ONLY IF SBX/DOT AND ZINC BORATE CHEMICALS ARE USED IN THE TREATMENT OF THE SILL PLATE.
1. PROVIDE PRESSURE TREATED (P.T.) LUMBER AT ALL MEMBERS IN CONTACT WITH CONCRETE OR MASONRY.
2. PROVIDE PRESSURE TREATED (P.T.) LUMBER AT ALL MEMBERS PERMANENTLY EXPOSED TO OPEN AIR CONDITIONS.
3. PRESSURE TREATED LUMBER THAT IS CUT, SHAPED, OR BORED SHALL HAVE THE MODIFIED SECTION TREATED TO RESIST ROT AND DETERIORATION.

CONCRETE REINFORCING STEEL:

1. REINFORCING BARS SHALL BE NEW BILLET STEEL AND SHALL CONFORM TO:
   ASTM A615 GRADE 60 FOR ALL REINFORCEMENT
2. ALL WELDED REINFORCING STEEL, METAL INSERTS AND CONNECTIONS SHALL CONFORM TO ALL APPLICABLE CODES AND STANDARDS.
3. WELDED WIRE FABRIC SHALL CONFORM TO ASTM A185.
4. REINFORCEMENT SHALL BE DETAILED, FABRICATED AND PLACED IN ACCORDANCE WITH ACI CODE 318 AND ACI MANUAL 315, U.N.O.
5. ALL REINFORCEMENT SHALL BE FREE OF LOOSE MILL AND RUST SCALE, OIL, DIRT AND COATINGS OF ANY MANNER THAT WILL REDUCE BOND.
6. ALL REINFORCEMENT IS CONTINUOUS WITH ADEQUATE LAPS.
7. REINFORCEMENT SHALL BE SECURED IN FORMS WITH SUITABLE TIES AND ANCHORAGE TO PREVENT DISPLACEMENT. BARS ADJACENT TO EARTH SHALL BE SUPPORTED BY CEMENT MORTAR CUBES.
8. THE FOLLOWING MINIMUM CONCRETE COVER SHALL BE PROVIDED FOR REINFORCEMENT:
   A. CONCRETE CAST AGAINST EARTH 3"
   B. CONCRETE EXPOSED TO EARTH OR WEATHER
      #6 AND LARGER 2"
      #5 AND SMALLER 1-1/2"
   C. CONCRETE NOT EXPOSED TO EARTH OR WEATHER
      SLABS, WALLS AND JOISTS, #11 AND SMALLER 3/4"
      BEAMS AND COLUMNS 1-1/2"
9. PLACE 2'-0" x 2'-0" BARS AT CORNERS AND INTERSECTIONS FOR WALLS AND FOUNDATIONS EQUAL IN SIZE AND SPACING TO HORIZONTAL REINFORCING.
10. REINFORCEMENT SPLICES, SHALL BE 42 BAR DIAMETER (24" MIN.) LAPS.
11. UNLESS OTHERWISE NOTED, DOWEL CONCRETE WALLS TO FOOTING WITH BARS OF SAME SIZE & SPACING AS WALL REINFORCEMENT.

GLUE LAMINATED MEMBERS:

1. ALL GLUE LAMINATED TIMBER BEAMS SHALL BE DOUGLAS FIR 24F-V4 AT ALL SIMPLE SPAN BEAMS AND GRADE 24F-V8 AT ALL CANTILEVER AND CONTINUOUS SPAN BEAMS, UNLESS OTHERWISE SPECIFIED ON THE DRAWINGS.
2. ALL GLUE LAMINATED TIMBER SHALL BE FABRICATED IN ACCORDANCE WITH AITC 117-93 MANUFACTURING, USING DF LUMBER AND WATERPROOFING ADHESIVE. EACH MEMBER SHALL BEAR AN AITC IDENTIFICATION MARK AND BE ACCOMPANIED BY AN AITC CERTIFICATE OF CONFORMANCE.
3. GLUE LAMINATED TIMBER BEAMS SHALL HAVE CAMBER AS INDICATED ON THE DRAWINGS.
4. ALL GLUE LAMINATED MEMBERS SHALL BE NOTCHED, SHAPED AND FINISHED AS PER PLANS AND SPECIFICATIONS.
5. SEE SPECIFICATIONS FOR FINISH AND PROTECTION.
6. ALL EXPOSED GLUE LAMINATED MEMBERS SHALL BE ARCHITECTURAL GRADE. SEE ARCH. DWGS FOR REQ'D LOCATIONS.

STRUCTURAL STEEL:

1. STRUCTURAL STEEL SHALL CONFORM TO THE FOLLOWING:
   ROLLED WIDE FLANGE: ASTM A-992 (Fy = 50 KSI)
   COLUMN BASEPLATES: ASTM A-36 (Fy = 36 KSI)
   MISC. PLATE, BAR, ANGLE, CHANNEL: ASTM A-36 (Fy = 36 KSI)
   HOLLOW STRUCTURAL STEEL (HSS): ASTM A-992 (Fy = 50 KSI)
2. ALL FABRICATION, ERECTION IDENTIFICATION OF STRUCTURAL STEEL SHALL CONFORM TO AISC SPECIFICATIONS.
3. ALL WELDING SHALL CONFORM TO AWS SPECIFICATIONS. ALL WELDERS SHALL BE CERTIFIED UNDER AWS SPECIFICATIONS.
4. WELDS SHALL BE MADE WITH E70 SERIES ELECTRODES UNLESS OTHERWISE NOTED. WELD TESTING AND INSPECTION SHALL CONFORM TO THE MINIMUM REQUIREMENTS OF THE AWS D1.1 AND AISC.
5. THE STEEL FABRICATOR AND ERECTOR SHALL DEVELOP A WELDING PROCEDURE SPECIFICATION (WPS) PER AWS D1.1, FOR ALL WELDS SUBMIT WRITTEN COPIES TO THE INSPECTOR FOR APPROVAL.
6. HIGH STRENGTH (HS) BOLTS SHALL CONFORM TO ASTM A325 UNLESS OTHERWISE NOTED.

NAILING AND FASTENERS:

1. NAILING INDICATED ON PLANS AND DETAILS ARE "COMMON" NAILS. MINIMUM FRAMING NAILING SHALL CONFORM TO OSSC 2014 TABLE R602.3(1). SEE DETAILS FOR ADDITIONAL TYPICAL NAILING REQUIREMENTS. SUBSTITUTION OF NAILS OTHER THAN "COMMON" IS NOT PERMITTED WITHOUT PRIOR APPROVAL.
2. POWER DRIVEN NAILS OTHER THAN "COMMON" IS NOT PERMITTED WITHOUT PRIOR APPROVAL.
3. SHEATHING NAILING SHALL BE AS FOLLOWS, UNLESS NOTED OTHERWISE ON PLANS:
   A. ROOF SHEATHING =10d AT 6" O.C. AT ALL PANEL EDGES
      =10d AT 12" O.C. AT ALL INTERMEDIATE SUPPORTS
   B. WALL SHEATHING = BLOCK ALL PANEL EDGES WITH 2X4 FLAT, NAILING AS INDICATED ON DRAWINGS
4. ALL BOLTED CONNECTIONS SHALL BE MADE WITH MACHINE BOLTS (MB) CONFORMING TO ASTM A307. ALL BOLTS AND LAGS SHALL BE INSTALLED WITH STANDARD WROUGHT WASHERS, UNLESS NOTED OTHERWISE.
5. JOIST HANGERS, HOLDOWNS, AND OTHER FRAMING ACCESSORIES ARE REFERRED TO ON PLANS BY PARTICULAR TYPE AS MANUFACTURED BY SIMPSON COMPANY - SAN LEANDRO, CA.
6. ALL HARDWARE IS TO BE FASTENED PER MANUFACTURER'S SPECIFICATIONS, U.N.O.
7. SILL PLATES AT WALLS SHALL BE BOLTED TO CONCRETE WITH 1/2" DIAMETER X 10" LONG ANCHOR BOLTS @ 48" O.C. MAX UNLESS A TIGHTER SPACING IS INDICATED IN THE SHEAR WALL PLANS AND SCHEDULE. ANCHORS SHALL ALSO BE PLACED WITHIN 1'-0" OF SILL PLATE ENDS, CORNERS OR SPLICES, U.N.O.

ABBREVIATIONS

AB	ANCHORBOLT	HORZ	HORIZONTAL
ABT	ABOUT	HS	HIGH STRENGTH
AC	ASPHALTIC CONCRETE	HSV	HIGH STRENGTH BOLT
ACI	AMERICAN CONCRETE INST.	HT	HEIGHT
ADD'L	ADDITIONAL	IN	INCH OR INCHES
APPROX	APPROXIMATE	LBS	POUNDS
ARCH	ARCHITECTURAL	LG	LONG
BBO	BEAM BY OTHERS	LL	LIVELOAD
BO	BY OTHERS	MAX	MAXIMUM
BP	BASE PLATE	MB	MACHINEBOLT
BLDG	BUILDING	MECH	MECHANICAL
BM	BEAM	MIN	MINIMUM
BOT	BOTTOM	MISC	MISCELLANEOUS
℄	CENTERLINE	MS	MIDDLE STRIP
CLR	CLEAR	NIC	NOT IN CONTRACT
COL	COLUMN	NO. or #	NUMBER
CONC	CONCRETE	NOM	NOMINAL
CONT	CONTINUOUS, CONTINUITY	NTS	NOT TO SCALE
CONT'D	CONTINUED	O.C.	ON CENTER
CS	COLUMN STRIP	PCF	POUNDS PER CUBIC FOOT
DB	DROP BEAM	PLCS	PLACES
DET, DTL	DETAIL	PL.	PLATE
DIA, Ø	DIAMETER	PSF	POUNDS PER SQUARE FOOT
DIM	DIMENSION	PSI	POUNDS PER SQUARE INCH
DWG	DRAWING	PT	PRESSURE TREATED
DWL	DOWEL	R	RADIUS
EA	EACH	REINF	REINFORCING
EF	EACH FACE	REQ'D	REQUIRED
ELECT	ELECTRICAL	RET W	RETAINING WALL
ELEV	ELEVATION	REV	REVISION
EQIP	EQUIPMENT	SCHD SHT	SCHEDULE SHEET
ETC	ET CETERA	SIM	SIMILAR
EW	EACH WAY	SPECS	SPECIFICATIONS
(E), EXIST	EXISTING	SQ	SQUARE
FB	FLUSHBEAM	STD	STANDARD
f'c	COMPRESSIVE STRENGTH OF CONCRETE, PSI	STIF	STIFFENER
		STL	STEEL
FCO	FLOOR CLEAN OUT	STRUCT	STRUCTURAL
FD	FLOOR DRAIN	T & B	TOP & BOTTOM
FDN FLR	FOUNDATION FLOOR	TOC	TOP OF CONCRETE
FOS	FACE OF STEEL	TOS	TOP OF STEEL
FS	FAR SIDE	TS	TUBE STEEL
FT	FOOT OR FEET	TYP	TYPICAL
FTG	FOOTING	UBC	UNIFORM BUILDING CODE
GA	GAUGE	U.N.O.	UNLESS NOTED OTHERWISE
GALV	GALVANIZED	VERT	VERTICAL
GRD	GRADE	W or W/	WITH
HGR	HANGER		

LEGEND AND SYMBOLS

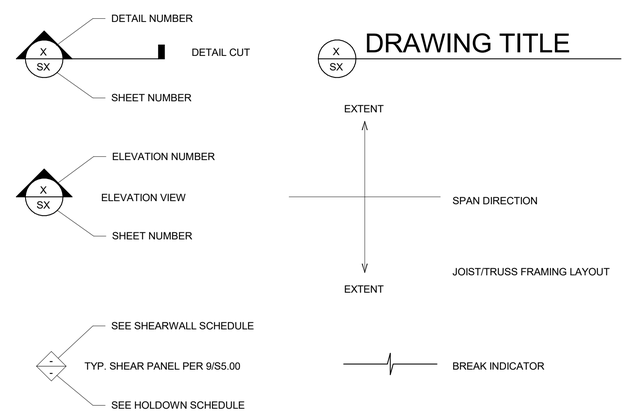

STRUCTURAL NOTES

PUBLIC WORKS OPERETIONS CENTER

291 EAST IVY AVE. LA CENTER, WA 98629

Harper Houf Peterson Righellis Inc.
ENGINEERS • PLANNERS
LANDSCAPE ARCHITECTS • SURVEYORS
205 SE Spokane Street, Suite 200, Portland, OR 97202
phone: 503.221.1131 www.hhpr.com fax: 503.221.1171

JEFFREY A. SCHWINDT
STATE OF WASHINGTON
45100
STRUCTURAL ENGINEER
PROFESSIONAL ENGINEER

DESIGNED:	JAS
DRAWN:	HHPR
CHECKED:	JAS
DATE:	10/03/2025

REVISIONS

NO.	DATE	DESCRIPTION

SHEET NO.

S1.00

JOB NO. CLC-07

WOOD SHEATHING:
1. ALL SHEATHING SHALL BE APA RATED SHEATHING WITH EXTERIOR GLUE AND PANEL IDENTIFICATION INDEX. PANEL THICKNESS AND IDENTIFICATION INDEX SHALL BE AS FOLLOWS:
   A. ROOF SHEATHING = 5/8" NOMINAL, INDEX 24/16
   B. WALLS = 7/16" NOMINAL, INDEX 32/16
2. FLOOR AND ROOF SHEATHING SHALL BE INSTALLED WITH FACE GRAIN PERPENDICULAR TO SUPPORTS AND END JOINTS SHALL BE STAGGERED.
3. PROVIDE 1 PLY CLIP PER SPAN @ UNSUPPORTED EDGE OF ROOF SHEATHING WHERE SUPPORT SPACING EXCEEDS 16" O.C. U.N.O. AS BLOCKED EDGES.
4. BLOCK ALL WALL SHEATHING WITH 2X4 BLOCKING AT ALL EDGES.
5.

SAWN FRAMING LUMBER:
1. ALL SAWN LUMBER SHALL BE S4S, GRADED IN ACCORDANCE WITH WCLIB RULES #17, OF THE FOLLOWING GRADES:
   2X STUD, PLATES, HEADERS, BLOCKING = DOUGLAS FIR # 2,
   4X BEAMS = DOUGLAS FIR-LARCH # 2
   6X BEAMS, POSTS = DOUGLAS FIR-LARCH # 1
2. ALL 2X LUMBER, FLAT WALL PLATES SHALL BE S-DRY
3. PROVIDE PRESSURE TREATED (P.T.) LUMBER AT ALL MEMBERS IN CONTACT WITH CONCRETE OR MASONRY.

STRUCTURAL SUBMITTALS:
1. SUBMITTAL PROCEDURE:
   A. DELIVER TO THE ENGINEER OF RECORD A MINIMUM OF (4) COPIES OF EACH SUBMITTAL ITEM
2. FOR EACH SUBMITTAL ITEM ALLOW (15) DAYS EXCLUDING DELIVERY TIME TO AND FROM THE CONTRACTOR.
3. SCHEDULE OF SUBMITTAL ITEMS:
   A. CONCRETE MIX DESIGNS
   B. SHOP DRAWINGS:
      1. MILD REINFORCING STEEL
      2. MANUFACTURED ROOF TRUSSES
      3. STRUCTURAL STEEL
      4. PRE-ENGINEERED METAL BUILDING FOR COVERED PARKING
   C. PRODUCT DATA
   D. SAMPLES OR ADDITIONAL PRODUCT DATA MAY BE REQUESTED

DEFERRED SUBMITTALS:
1. CONTRACTOR TO PROVIDE ALL DESIGN, ENGINEERING AND DRAWINGS FOR THE FOLLOWING DEFERRED SUBMIT IN A BIDDER/DESIGN FORMAT
   A. MANUFACTURED ROOF TRUSSES AND SUPPORTING HANGERS
   B. MECHANICAL EQUIPMENT ANCHORAGE
   C. PRE-ENGINEERED METAL BUILDING FOR COVERED PARKING
2. CONTRACTOR TO SUBMIT ALL NECESSARY DESIGN AND DOCUMENTS TO THE A/E DESIGN TEAM FOR REVIEW. SUBMITTAL SHALL INCLUDE ALL DRAWINGS, DIAGRAMS, DETAILS, CONNECTIONS, AND CALCULATIONS SUITABLE FOR SUBMITTAL TO BUILDING AUTHORITY, ALL STAMPED & SIGNED BY REGISTERED PROFESSIONAL ENGINEER IN OREGON.

SPECIAL INSPECTION:
INSPECTOR IS TO BE CONTRACTED BY OWNER, ENGINEER OR ARCHITECT PER OSSC CODE REQUIREMENTS, AND LOCAL ORDINANCES. A RE-CONSTRUCTION MEETING SHALL TAKE PLACE PRIOR TO FOUNDATION INSTALLATION. THE CONTRACTOR, ARCHITECT, ENGINEER AND INSPECTOR SHALL ATTEND. SPECIAL INSPECTIONS SHALL BE PERFORMED ON THE FOLLOWING WORK:

1. SUBGRADE:
   A. OBSERVATION OF SITE PREPARATION, GRADING PLACEMENT SHALLOW FOUNDATION SUBGRADE PREPARATION, AND COMPACTION OF OPERATIONS BY GEOTECHNICAL ENGINEER.
   B. TEMPORARY SHORING FOR BASEMENT WALL CONSTRUCTION PER SHORING DESIGNER (BY OTHERS)
2. CONCRETE:
   A. REINFORCING STEEL - PERIODIC
   B. FORM WORK FOR SHAPE, LOCATION, AND DIMENSION - PERIODIC
   C. PLACEMENT OF CONCRETE FOUNDATIONS, WALLS, LID - CONTINUOUS
   D. TAKING OF TEST SPECIMENS-AIR, STRENGTH AND SLUMP - CONTINUOUS
   E. BOLTS CAST IN CONCRETE - PERIODIC
   F. EPOXY - PER MANUFACTURER'S APPROVED ICC REPORT
3. STEEL: FABRICATOR/ERECTOR SUBMIT WPS TO INSPECTOR, WITH THE EXCEPTION OF SHOP WELDING PERFORMED BY AN APPROVED FABRICATORS SHOP.
   A. SINGLE PASS FILLET WELDS NOT EXCEEDING 5/16" - PERIODIC
   B. GROOVE, COMPLETE JOINT PENETRATION - CONTINUOUS
4. WOOD:
   A. PERIODIC SPECIAL REQUIRED FOR ALL NAILING, BOLTING, ANCHORING, AND OTHER FASTENING OF ELEMENTS OF THE SEISMIC FORCE RESISTING SYSTEM, INCLUDING WOOD SHEAR WALLS, WOOD DIAPHRAGMS, DRAG STRUTS, BRACES, SHEAR PANELS, AND HOLDOWNS. INSPECTIONS NOT REQUIRED FOR ELEMENTS WHERE FASTENER SPACING IS EQUAL TO OR MORE THAN 4" ON CENTER.

IT IS THE CONTRACTORS RESPONSIBILITY TO CONTACT THE INSPECTOR, (24 HR. MINIMUM NOTICE), FOR INSPECTION SERVICES. THE INSPECTOR SHALL BE PRESENT AT THE PRE-CONSTRUCTION MEETING TO COORDINATE WORK WITH THE CONTRACTOR, ENGINEER AND OWNER. ALL INSPECTORS SHALL BE CERTIFIED TO PERFORM NECESSARY INSPECTION PER OSSC, ACI, AWS OR OTHER APPROVED GOVERNING INSTITUTION.

STRUCTURAL OBSERVATION:
1. STRUCTURAL OBSERVATION SHALL BE PERFORMED ON THE PROJECT. OBSERVATION WILL BE REQUIRED AT THE FOLLOWING STAGES:
   A. PRIOR TO FOUNDATION POUR
   B. AT COMPLETION OF ROOF TRUSS INSTALLATION
2. OBSERVATION OF TEMPORARY SHORING WALL CONSTRUCTION TO BE COMPLETED PER THE SHORING DESIGNER AND GEOTECHNICAL ENGINEER (BY OTHERS)
3. THE CONTRACTOR SHALL NOTIFY THE ENGINEER OF RECORD AT LEAST FOUR (4) DAYS IN ADVANCE OF COMPLETION REQUIRING SITE OBSERVATION.

HOLDOWN SCHEDULE

- / 0	NOT REQUIRED	NA	NA
- / 1	SIMPSON HDU8	SIMPSON PAB7. SECURE STRAP TO 6x6 W/ (20) SDS 1/4 x 2-1/2 SCREWS.	PROVIDE (2) #4 DOWELS, (1) EACH SIDE OF PAB IN STEM

NOTES:
1. DOUBLE STUDS SHALL BE LAMINATED TOGETHER W/ 16D NAILS @ 6" FULL HEIGHT (TYPICAL).
2. PROVIDE HOLDOWN NOTED WITHIN 6" OF EACH END OF EACH SHEAR WALL SHOWN ON PLANS.

SHEAR WALL SCHEDULE

	SHEAR WALL INFORMATION	SILL PLATE @ CONC / @ JOIST OR BLK'G	RIM JOIST CONDITION	COMMENTS
- / -				
A / -	7/16" APA RATED SHT'G ONE SIDE W/ 10d NAILS @ 6" O.C. EDGES & 12" O.C. FIELD	1/2" Ø AB's @ 48" O.C. (EMBED 7") / 16d @ 4" O.C.	SIMPSON LTP4 @ 24" O.C. RIM JOIST TO PLATE BELOW	SEE NOTE 1
B / -	7/16" APA RATED SHT'G **BOTH** SIDES W/ 10d NAILS @ 3" O.C. EDGES & 12" O.C. FIELD	1/2" Ø AB's @ 12" O.C. (EMBED 7") / 16d @ 2" O.C.	SIMPSON LTP4 @ 6" O.C. RIM JOIST TO PLATE BELOW	SEE NOTE 1, 2, 3

NOTES:
1. 1/4"X 3"X 3" STEEL PLATE GALVANIZED WASHER REQUIRED AT EACH ANCHOR BOLT BETWEEN SILL PLATE AND NUT.
2. IF AB SPACING IS GREATER THAN SHEAR WALL LENGTH INSTALL (1) AB WITHIN 12" OF EACH WALL END.
3. FRAMING AT ADJOINING PANEL EDGES SHALL BE A 3" NOMINAL OR GREATER AND NAILS ARE TO BE STAGGERED. (2) 2X MEMBERS MAY BE UTILIZED IN PLACE OF A SINGLE 3X PROVIDED THAT THE (2) MEMBERS ARE NAIL LAMINATED W/ (2) 16D AT 4" O.C. STAGGERED.

STRUCTURAL NOTES
PUBLIC WORKS OPERETIONS CENTER
291 EAST IVY AVE. LA CENTER, WA 98629

Harper Houf Peterson Righellis Inc.
ENGINEERS • PLANNERS
LANDSCAPE ARCHITECTS • SURVEYORS
205 SE Spokane Street, Suite 200, Portland, OR 97202
phone: 503.221.1131 www.hhpr.com fax: 503.221.1171

JEFFREY A. SCHWINDT
STATE OF WASHINGTON
45100
STRUCTURAL ENGINEER
PROFESSIONAL ENGINEER

DESIGNED: JAS
DRAWN: HHPR
CHECKED: JAS
DATE: 10/03/2025

REVISIONS

DATE	NO.	DESCRIPTION

SHEET NO.
S1.01

JOB NO. CLC-07

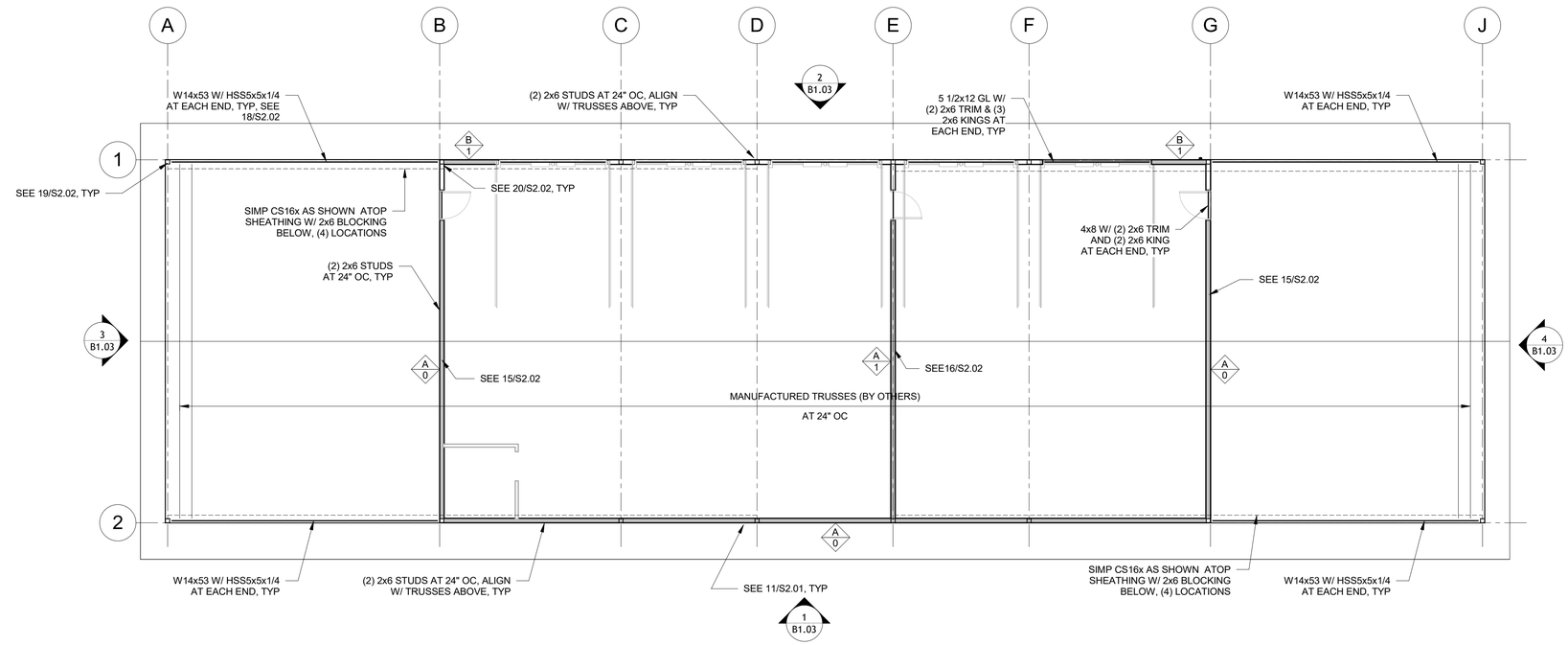

2 S1.02 SHOP ROOF FRAMING
1/8" = 1'-0"

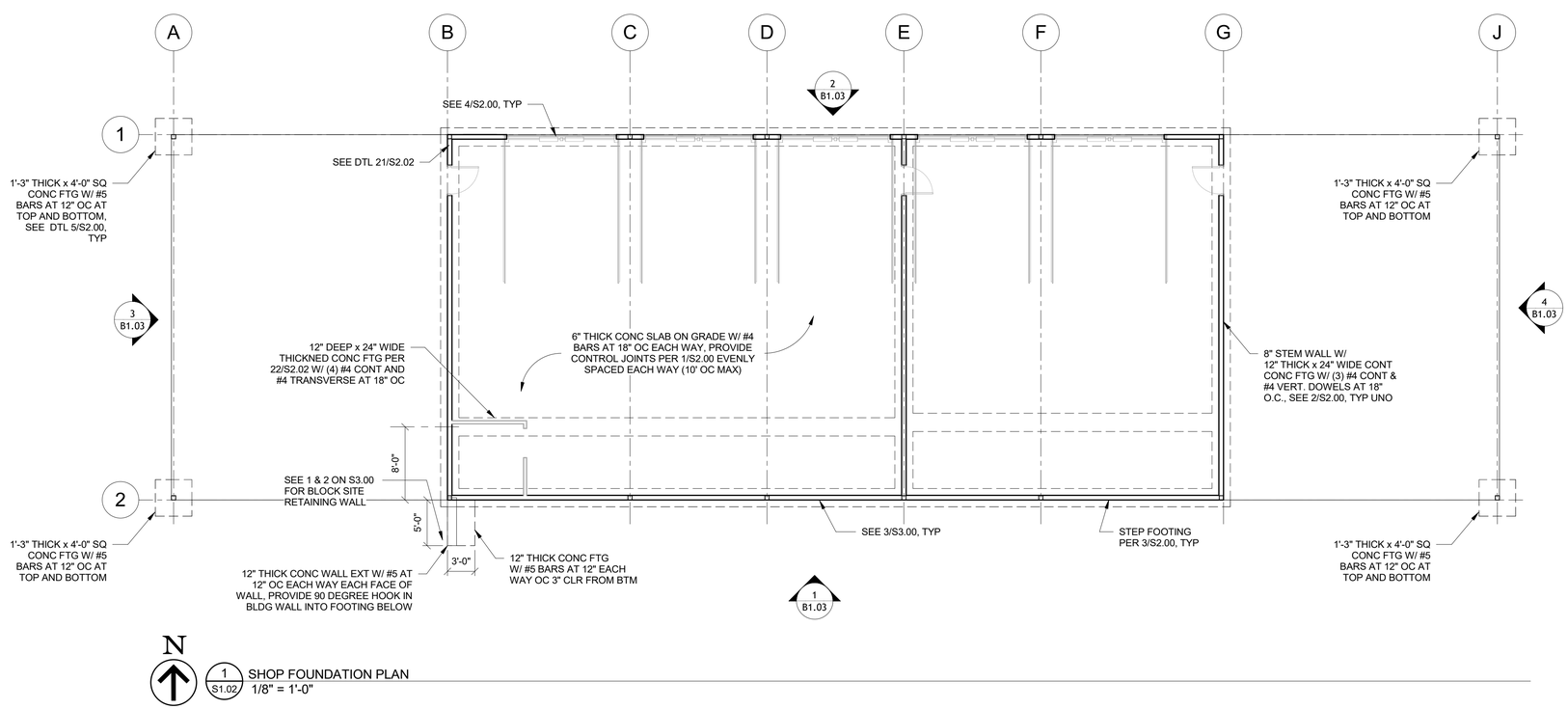

1 S1.02 SHOP FOUNDATION PLAN
1/8" = 1'-0"

SHOP FOUNDATION & ROOF FRAMING PLAN
PUBLIC WORKS OPERETIONS CENTER
291 EAST IVY AVE. LA CENTER, WA 98629

Harper Houf Peterson Righellis Inc.
ENGINEERS • PLANNERS
LANDSCAPE ARCHITECTS • SURVEYORS
205 SE Spokane Street, Suite 200, Portland, OR 97202
phone: 503.221.1131 www.hhpr.com fax: 503.221.1171

JEFFREY A. SCHWINDT
STATE OF WASHINGTON
45100
STRUCTURAL ENGINEER
PROFESSIONAL ENGINEER

DESIGNED: JAS
DRAWN: HHPR
CHECKED: JAS
DATE: 10/03/2025

REVISIONS

DATE	NO.	DESCRIPTION

SHEET NO.
S1.02

JOB NO.
CLC-07

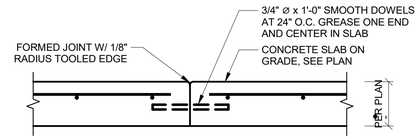

CONSTRUCTION JOINT

NOTE:
PROVIDE SAWCUTS AS SOON AS PRACTICAL AFTER SLAB CAN SUPPORT EQUIPMENT.

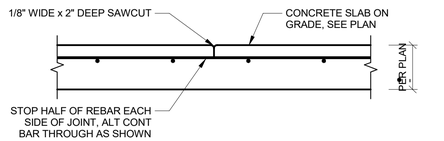

CRACK CONTROL JOINT

1 S2.00 CONCRETE WALL CONTROL JOINTS
1" = 1'-0"

NOTE:
1. HOLDOWN ANCHOR FOOTING EMBED NOTED ON HOLDOWN SCHEDULE DOES NOT INCLUDE EMBED INTO STEM WALL.

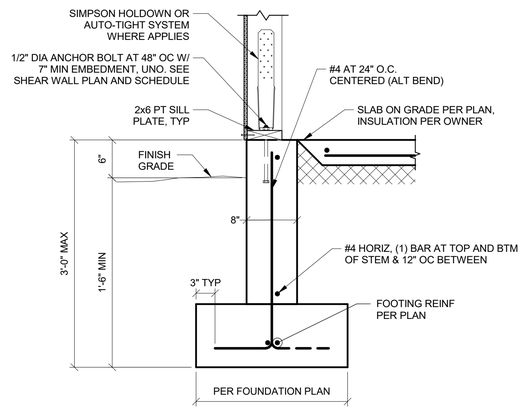

2 S2.00 HOLDOWN OR ANCHOR BOLT TO STEMWALL
1" = 1'-0"

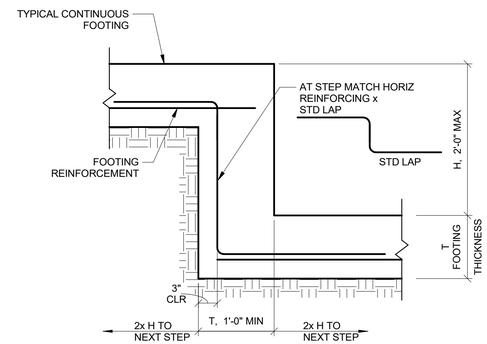

3 S2.00 STEPPED FOOTING DETAIL
1" = 1'-0"

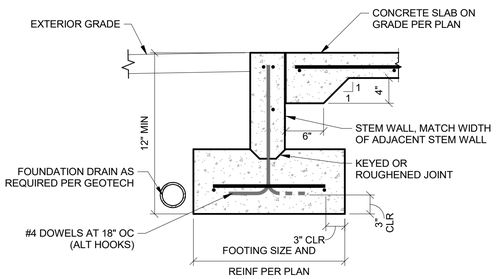

4 S2.00 SLAB EDGE AT DOOR OPENING
1" = 1'-0"

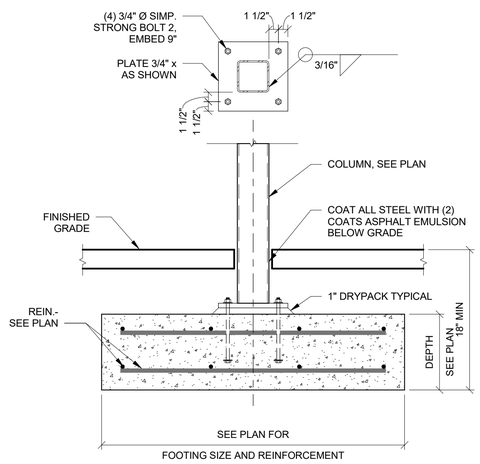

5 S2.00 STEEL POST FOUNDATION
1" = 1'-0"

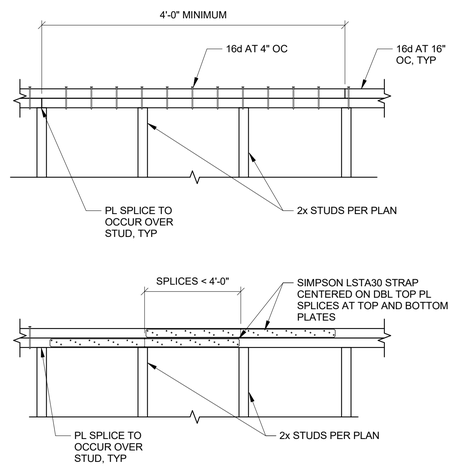

6 S2.00 DOUBLE TOP PLATE SPLICE
1" = 1'-0"

NOTES:
1. MAINTAIN 3/8" MINIMUM EDGE DISTANCE FROM WALL SHEATHING TO NAILS.
2. EDGE NAILING TO BE APPLIED TO ALL PANEL EDGES.
3. PLACE FACE GRAIN OF PLYWOOD HORIZONTAL.
4. FOR NON-BEARING WALLS, USE SINGLE KING STUD.

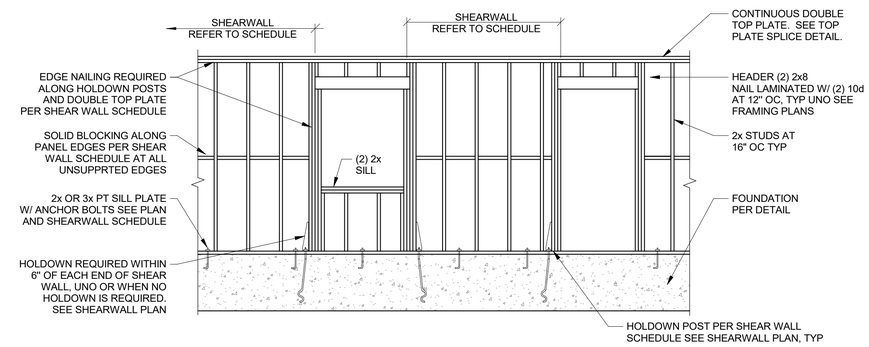

7 S2.00 TYPICAL STUD & SHEAR WALL ELEVATION
1" = 1'-0"

SHOP DETAILS
PUBLIC WORKS OPERETIONS CENTER
291 EAST IVY AVE. LA CENTER, WA 98629

Harper Houf Peterson Righellis Inc.
ENGINEERS • PLANNERS
LANDSCAPE ARCHITECTS • SURVEYORS
205 SE Spokane Street, Suite 200, Portland, OR 97202
phone: 503.221.1131 www.hhpr.com fax: 503.221.1171

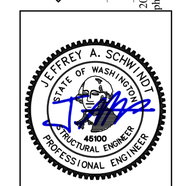

DESIGNED: Designer
DRAWN: Author
CHECKED: Checker
DATE: 10/03/2025

REVISIONS

NO.	DATE	DESCRIPTION

SHEET NO.
S2.00

JOB NO.
CLC-07

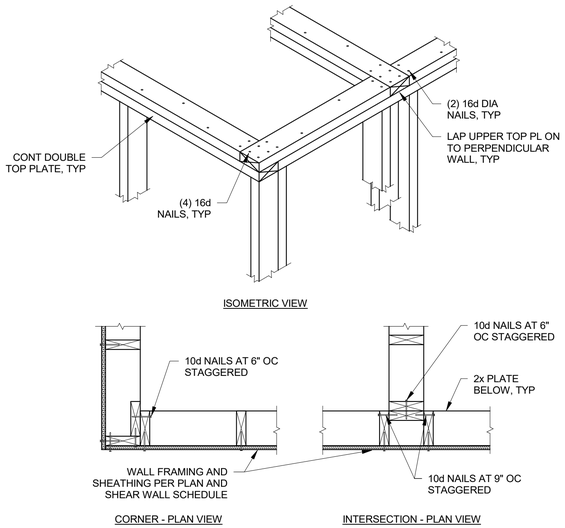

8 S2.01 WALL FRAMING AT CORNERS AND INTERSECTIONS
1" = 1'-0"

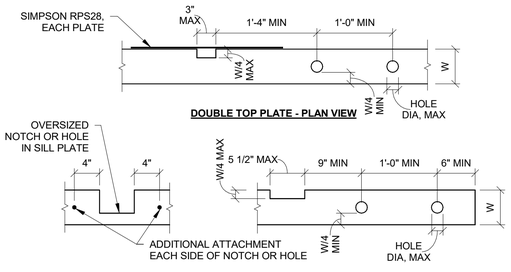

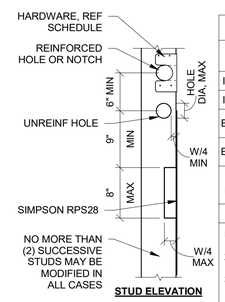

ALLOWABLE SIZES OF DRILLED HOLES IN WALL FRAMING MEMBERS

MEMBER	UNREINFORCED	DOUBLED MEMBER	REINFORCED
INTERIOR STUD - 2x4	3/4"	1 1/4"	1 1/2" - SIMP SS1.5
INTERIOR STUD - 2x6	1 1/4"	2"	2 1/4" - SIMP SS1.5
EXTERIOR STUD - 2x6	1"	1 1/2"	1 3/4" - SIMP CTS218 EACH SIDE
EXTERIOR STUD - 2x8	1 3/8"	2 1/4"	2 1/2" - SIMP CTS218 EACH SIDE
SOLE PL, SILL PL, DOUBLE TOP PLATE	W/3	NA	W/2 - SIMP CS18x30" EACH SIDE OF EACH 2x (UNO)
WOOD POST	W/8	NA	NA

NOTES:
1. "W" INDICATES WIDTH OR DEPTH OF MEMBER.
2. ALL NOTCHES TO HAVE CORNERS PRE-DRILLED, OVERCUTS COUNT IN NOTCH DEPTH
3. ALL OTHER CONDITIONS SHALL BE APPROVED BY HHPR, PRIOR TO DRILLING OR CUTTING.
4. A 'DOUBLED MEMBER' IS DEFINED AS UPSIZING A SPECIFIED SINGLE MEMBER TO A DOUBLED MEMBER OR A SPECIFIED DOUBLED MEMBER TO A (4)-PLY MEMBER, ETC.

9 S2.01 ALLOWABLE HOLES IN STUDS
1" = 1'-0"

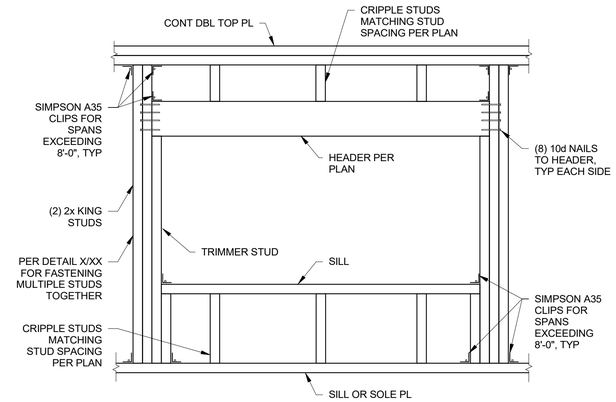

10 S2.01 TYPICAL HEADER OPENING
1" = 1'-0"

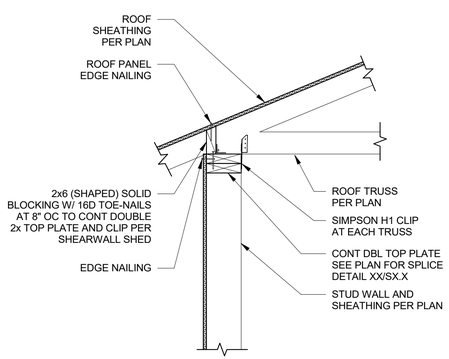

11 S2.01 ROOF TRUSS PERPENDICULAR TO EXTERIOR WALL (NO HEEL)
1" = 1'-0"

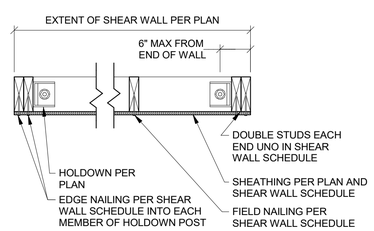

12 S2.01 HOLDOWN DETAIL (PLAN VIEW)
1" = 1'-0"

NOTES:
1. PL WASHER TO BE 0.229" THICK AND HOT DIPPED GALVANIZED.
2. LOCATE ANCHOR BOLTS CLEAR OF STUDS AND POSTS.
2. PLATE WASHER REQUIRED AT ALL SHEAR WALLS ANCHOR BOLTS. AT NON-SHEAR WALLS PROVIDE STANDARD CUT WASHER
3. HOLDOWN BOLTS MAY BE USED AS SILL PL ANCHOR BOLTS PROVIDED THEY ARE HOT DIPPED GALVANIZED AND HAVE MIN PLATE WASHER AS SHOWN

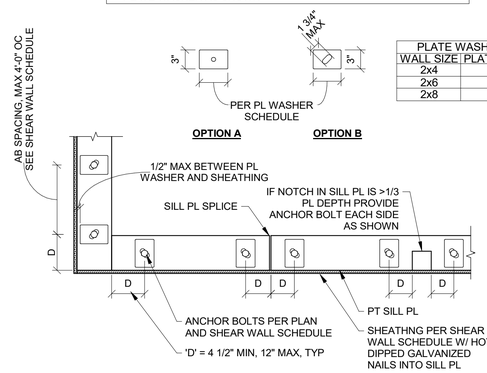

PLATE WASHER SCHEDULE	
WALL SIZE	PLATE WASHER SIZE
2x4	3"x3"
2x6	3"x4 1/2"
2x8	3"x6 1/2"

13 S2.01 SHEAR WALL SILL PLATE ANCHORAGE
1" = 1'-0"

WOOD DETAILS
PUBLIC WORKS OPERETIONS CENTER
291 EAST IVY AVE. LA CENTER, WA 98629

Harper Houf Peterson Righellis Inc.
ENGINEERS • PLANNERS
LANDSCAPE ARCHITECTS • SURVEYORS
205 SE Spokane Street, Suite 200, Portland, OR 97202
phone: 503.221.1131 www.hhpr.com fax: 503.221.1171

JEFFREY A. SCHWINDT
STATE OF WASHINGTON
45100
STRUCTURAL ENGINEER
PROFESSIONAL ENGINEER

DESIGNED: Designer
DRAWN: Author
CHECKED: Checker
DATE: 10/03/2025

REVISIONS

NO.	DATE	DESCRIPTION

SHEET NO.
S2.01

JOB NO.
CLC-07

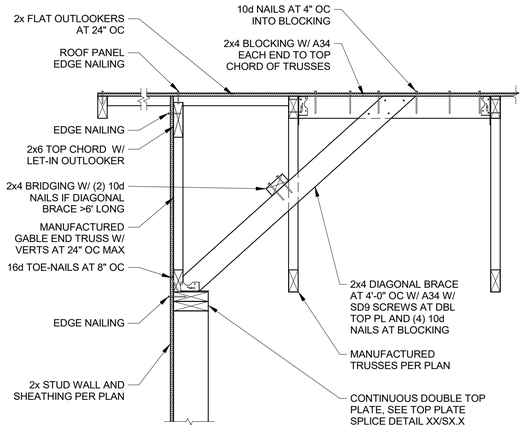

15 S2.02 TRUSS PARALLEL TO EXTERIOR WALL
1" = 1'-0"

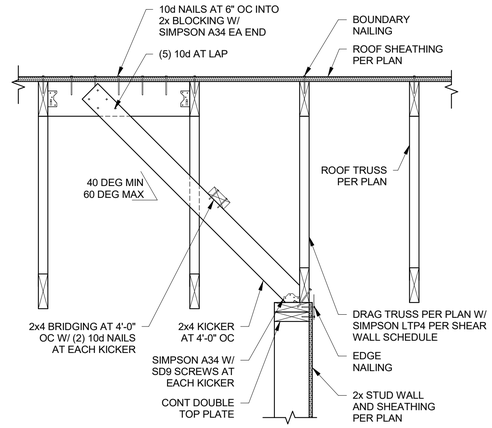

16 S2.02 INTERIOR WALL PARALLEL TO ROOF TRUSS
1" = 1'-0"

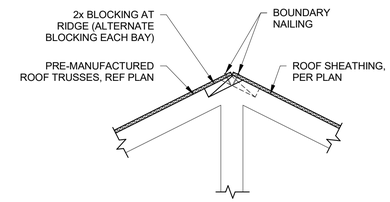

17 S2.02 TRUSS RIDGE BLOCKING
1" = 1'-0"

NOTE: SEE DETAIL 14/S2.00 FOR ADDITIONAL REQ'MENTS

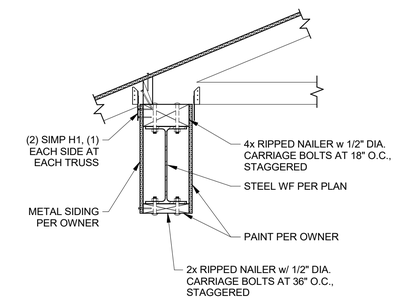

18 S2.02 STEEL WF BEAM AT ROOF
1" = 1'-0"

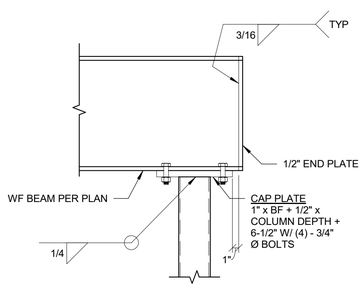

19 S2.02 STEEL WF TO POST
1" = 1'-0"

NOTE: APPLY COLD GALV

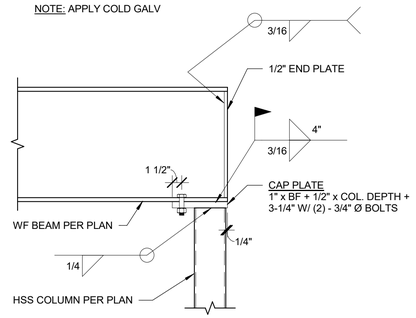

20 S2.02 STEEL BEAM TO END COLUMN
1" = 1'-0"

NOTE: PLACE BASE PLATE DIRECTLY ATOP CONCRETE STEM WALL w/ ±1" NON SHRINK GROUT BELOW

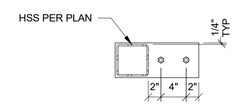

21 S2.02 STEEL BASE PLATE DETAIL
1" = 1'-0"

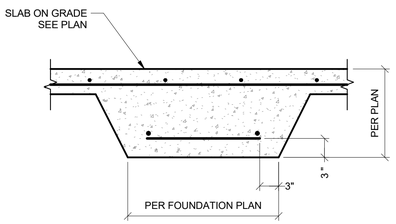

22 S2.02 INTERIOR THICKENED SLAB
1" = 1'-0"

WOOD DETAILS

PUBLIC WORKS OPERETIONS CENTER

291 EAST IVY AVE. LA CENTER, WA 98629

Harper Houf Peterson Righellis Inc.
ENGINEERS • PLANNERS
LANDSCAPE ARCHITECTS • SURVEYORS
205 SE Spokane Street, Suite 200, Portland, OR 97202
phone: 503.221.1131 www.hhpr.com fax: 503.221.1171

JEFFREY A. SCHWIANDT
STATE OF WASHINGTON
45100
STRUCTURAL ENGINEER
PROFESSIONAL ENGINEER

DESIGNED: Designer
DRAWN: Author
CHECKED: Checker
DATE: 10/03/2025

REVISIONS

NO.	DESCRIPTION	DATE

SHEET NO.
S2.02

JOB NO. CLC-07

NOTES:
1. SEE 2/S2.00 FOR WALL FRAMING ABOVE
2. BACKFILL WALL & FULLY COMPACT PRIOR TO PLACEMENT OF WALL FRAMING ABOVE

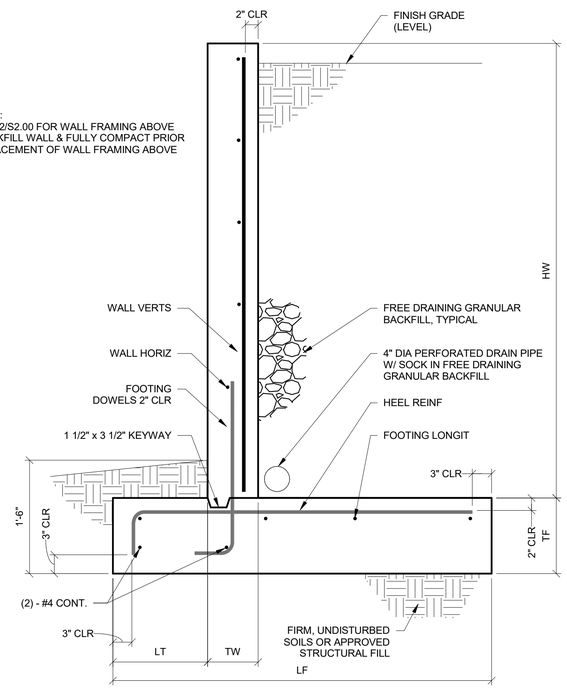

3 S3.00 CONCRETE RETAINING WALL TOE
1" = 1'-0"

SCHEDULE

DIMENSIONS					FOOTING REINFORCING			WALL REINF.	
HW	TF	TW	LF	LT	FTG LONGIT	HEEL REINF	FTG DOWELS	WALL VERT	WALL HORIZ
UP TO 4'-0"	12"	8"	4'-6"	1'-0"	(8) - #4	#5 AT 12"	#5 x 40" AT 12"	#5 AT 12"	#4 AT 12"
UP TO 6'-0"	12"	8"	6'-0"	1'-6"	(10) #4	#5 AT 12"	#5 x 40" AT 12"	#5 AT 12"	#4 AT 12"
UP TO 8'-0"	15"	10"	7'-6"	1'-6"	(14) #4	#5 AT 6"	#5 x 40" AT 6"	#5 AT 6"	#4 AT 12"
UP TO 10'-0"	15"	8"	9'-0"	2'-0"	(16) #4	#5 AT 6"	#5 x 40" AT 4"	#5 AT 4"	#4 AT 12"

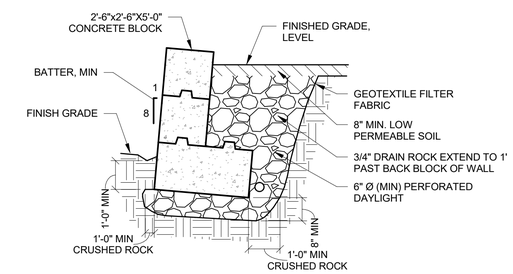

1 S3.00 CANTILEVERED CONCRETE RETAINING WALL TOE
1/4" = 1'-0"

NOTES:
1. SEE DETAIL 1 FOR ADDITIONAL DETAILING REQUIREMENTS

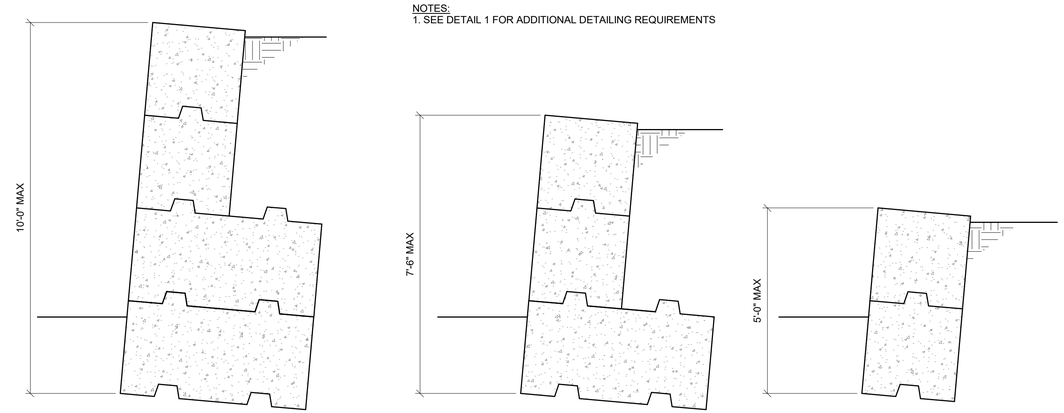

2 S3.00 CANTILEVERED CONCRETE RETAINING WALL TOE
1/4" = 1'-0"

RETAINING STRUCTURES
PUBLIC WORKS OPERETIONS CENTER
291 EAST IVY AVE. LA CENTER, WA 98629

Harper Houf Peterson Righellis Inc.
ENGINEERS • PLANNERS
LANDSCAPE ARCHITECTS • SURVEYORS
205 SE Spokane Street, Suite 200, Portland, OR 97202
phone: 503.221.1131 www.hhpr.com fax: 503.221.1171

JEFFREY A. SCHWINDT
STATE OF WASHINGTON
45100
STRUCTURAL ENGINEER
PROFESSIONAL ENGINEER

DESIGNED: Designer
DRAWN: Author
CHECKED: Checker
DATE: 10/03/2025

REVISIONS

NO.	DESCRIPTION	DATE

SHEET NO.
S3.00

JOB NO.
CLC-07

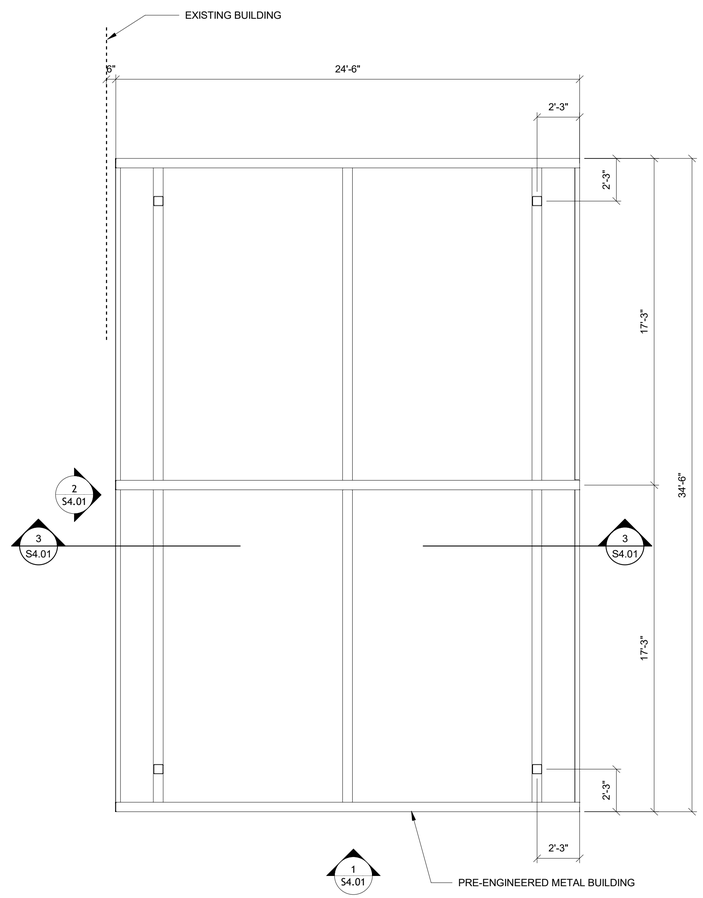

2 S4.00 COVERED PARKING ROOF PLAN
1/4" = 1'-0"

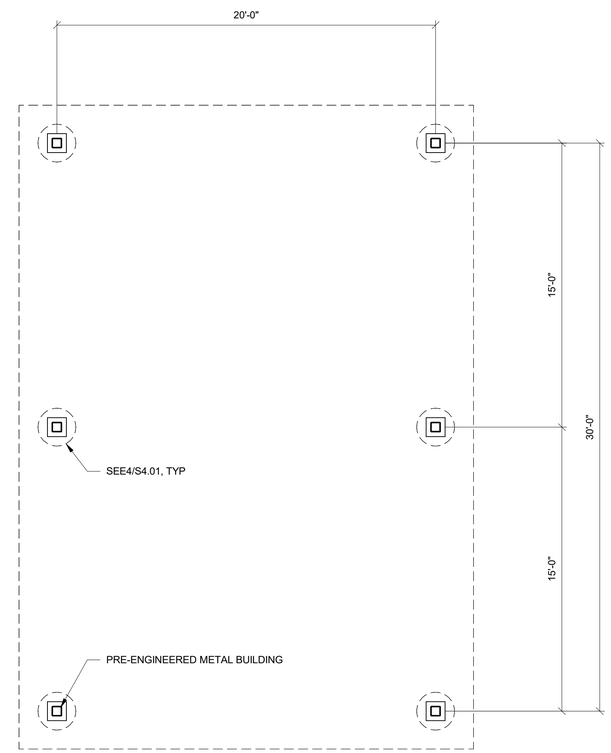

1 S4.00 COVERED PARKING FLOOR PLAN
1/4" = 1'-0"

COVERED PARKING FLOOR PLAN
PUBLIC WORKS OPERETIONS CENTER
291 EAST IVY AVE. LA CENTER, WA 98629

Harper Houf Peterson Righellis Inc.
ENGINEERS • PLANNERS
LANDSCAPE ARCHITECTS • SURVEYORS
205 SE Spokane Street, Suite 200, Portland, OR 97202
phone: 503.221.1131 www.hhpr.com fax: 503.221.1171

JEFFREY A. SCHWIND
STATE OF WASHINGTON
46100
STRUCTURAL ENGINEER
PROFESSIONAL ENGINEER

DESIGNED:	JAS
DRAWN:	HHPR
CHECKED:	JAS
DATE:	10/03/2025

REVISIONS

NO.	DATE	DESCRIPTION

SHEET NO.
S4.00

JOB NO. CLC-07

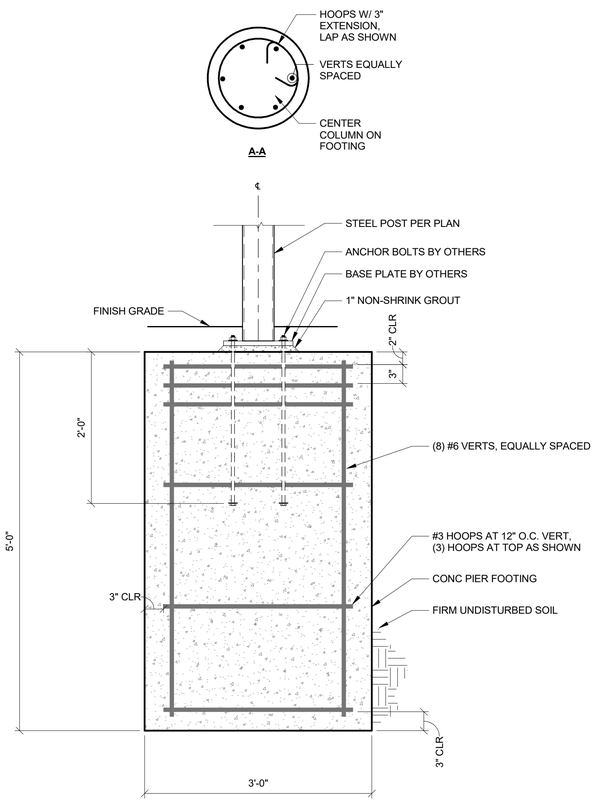

4 S4.01 PIER FOUNDATION
1" = 1'-0"

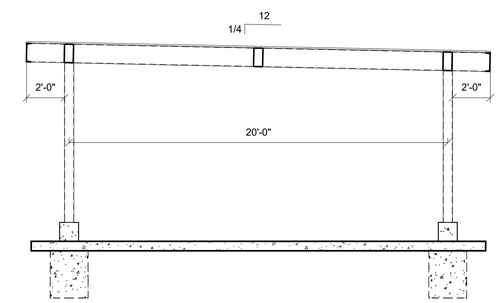

3 S4.01 SECTION
1/4" = 1'-0"

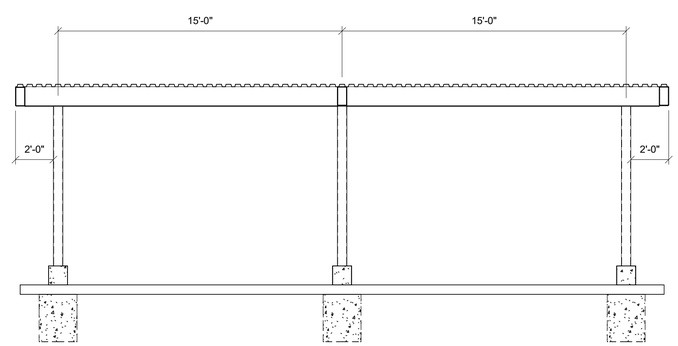

2 S4.01 ELEVATION
1/4" = 1'-0"

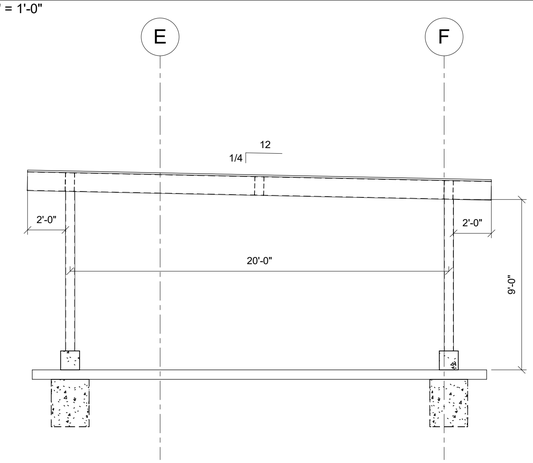

1 S4.01 ELEVATION
1/4" = 1'-0"

COVERED PARKING ELEVATIONS AND SECTIONS

PUBLIC WORKS OPERETIONS CENTER

291 EAST IVY AVE. LA CENTER, WA 98629

Harper Houf Peterson Righellis Inc.
ENGINEERS • PLANNERS
LANDSCAPE ARCHITECTS • SURVEYORS
205 SE Spokane Street, Suite 200, Portland, OR 97202
phone: 503.221.1131 www.hhpr.com fax: 503.221.1171

JEFFREY A. SCHWINDT
STATE OF WASHINGTON
45100
STRUCTURAL ENGINEER
PROFESSIONAL ENGINEER

DESIGNED:	JAS
DRAWN:	HHPR
CHECKED:	JAS
DATE:	10/03/2025

REVISIONS

DATE	NO.	DESCRIPTION

SHEET NO.
S4.01

JOB NO.
CLC-07